RSL182232-A INA

Cylindrical roller bearings

TYPE: Roller bearings, Cylindrical roller bearings, Single row, Without outer ring, Full complement cylindrical roller bearing

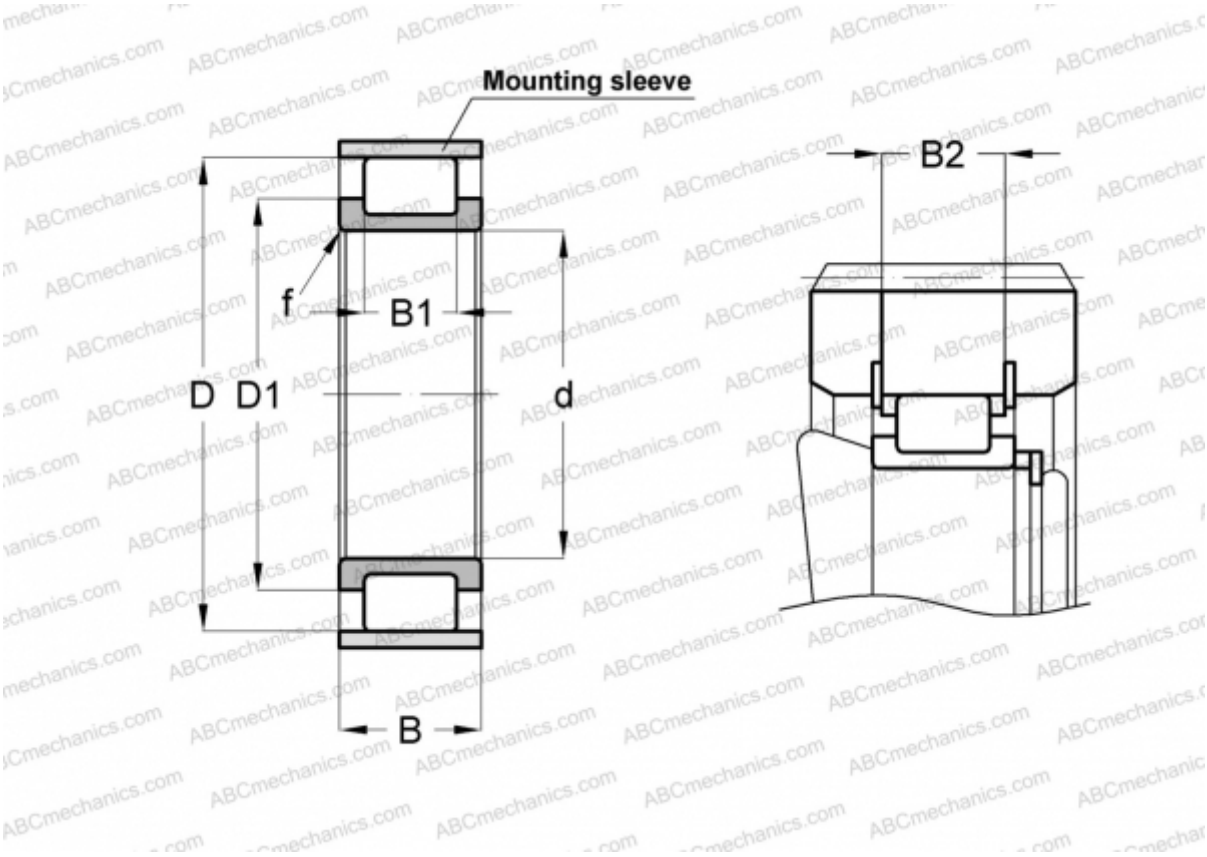

Technical specification

DIMENSIONS, MM	
d	160,000
D	266,360
D1	208,800
B	80,000
B1	58,000
B2	74,400
f	3,000
WEIGHT, KG	16,000
MANUFACTURER	INA

ASSOCIATED PRODUCTS

F-589849 + 267X5