RN2204-E-MPBX INA

Cylindrical roller bearings

TYPE: Roller bearings, Cylindrical roller bearings, Single row, Without outer ring, With cage

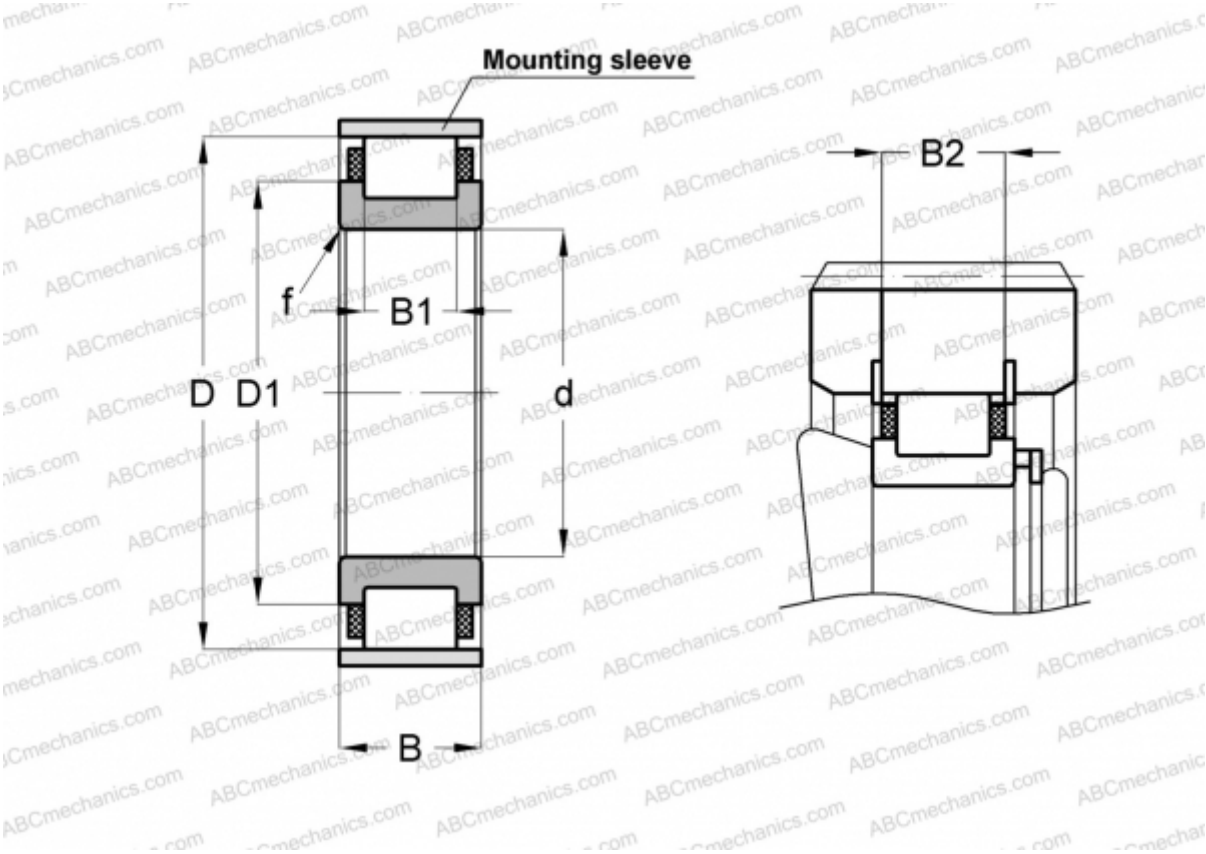

Technical specification

DIMENSIONS, MM	
d	20,000
D	41,500
D1	29,700
B	18,000
B1	11,000
B2	16,200
f	1,000
WEIGHT, KG	0,097
MANUFACTURER	INA

ASSOCIATED PRODUCTS

SB42 1,5X2,3