CPM 2613 CPM

Cylindrical roller bearings

TYPE: Roller bearings, Cylindrical roller bearings, Double row, Without outer ring, CPM production, type A, 2 flange ring, 1 locking ring

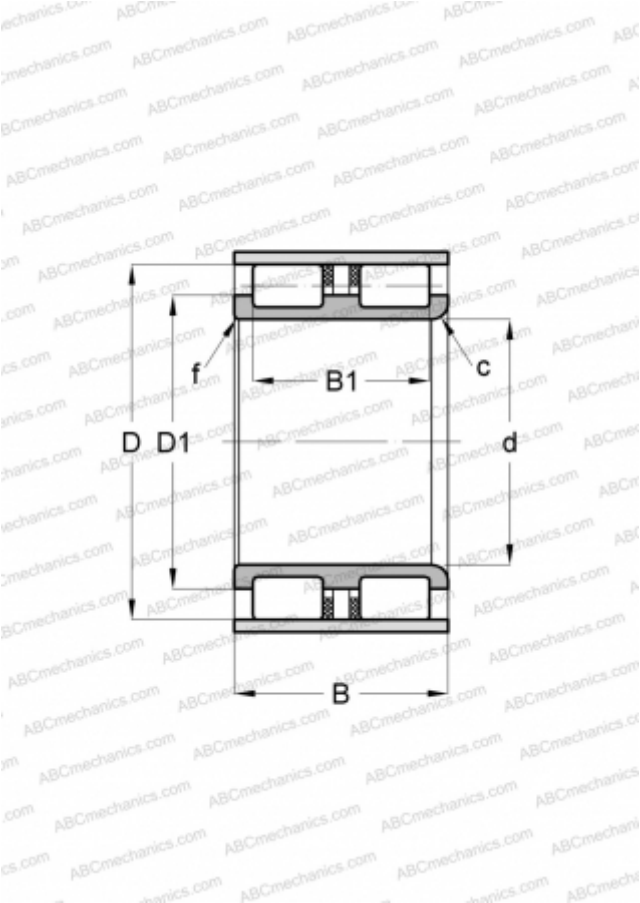

Technical specification

DIMENSIONS, MM	
d	25,000
D	40,250
D1	34,300
B	32,000
B1	24,000
f	0,300
c	3,000

MANUFACTURER	CPM