CPM 2729 CPM

Cylindrical roller bearings

TYPE: Roller bearings, Cylindrical roller bearings, Double row, Without outer ring, CPM production, type D, rings to both side

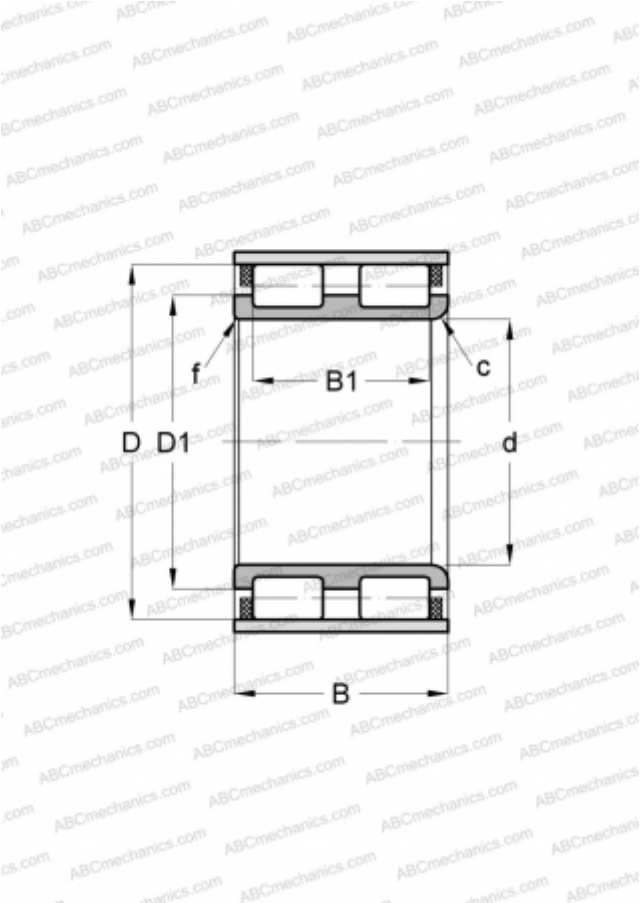

Technical specification

DIMENSIONS, MM	
d	40,000
D	60,680
D1	51,400
B	31,000
B1	25,600
f	0,300
c	3,200

MANUFACTURER	CPM