803580 FAG

Cylindrical roller bearings

TYPE: Roller bearings, Cylindrical roller bearings, Four row, For loose fit on the roll neck, design 5 (FAG)

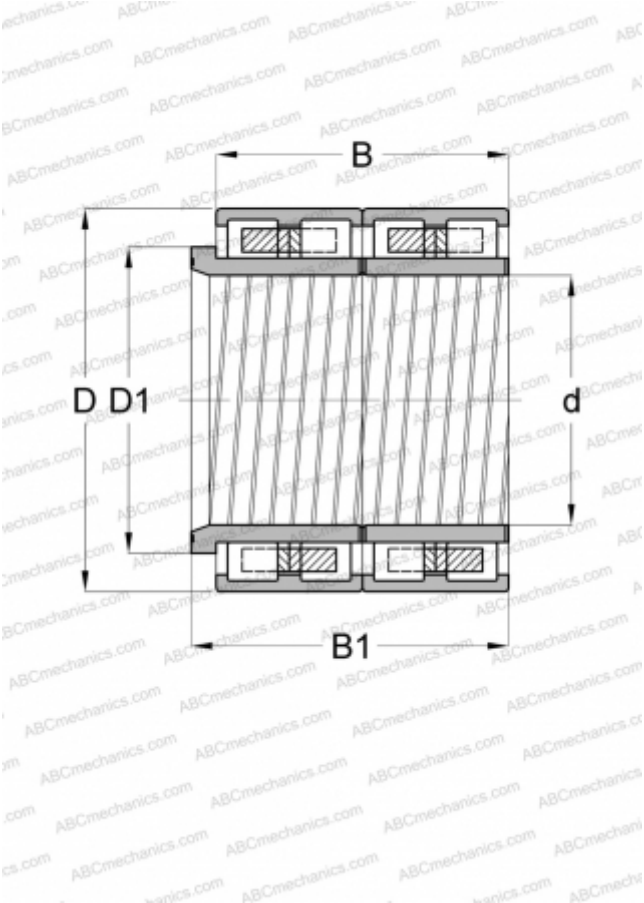

Technical specification

DIMENSIONS, MM	
d	390,000
D	540,000
D1	431,000
B	320,000
B1	350,000
WEIGHT, KG	234,000
MANUFACTURER	FAG