J-36 NSK

Needle roller bearings

TYPE: Roller bearings, Needle, Single row, Drawn cup, with cage, with open ends, miniature, type J, JH (NSK), inch size

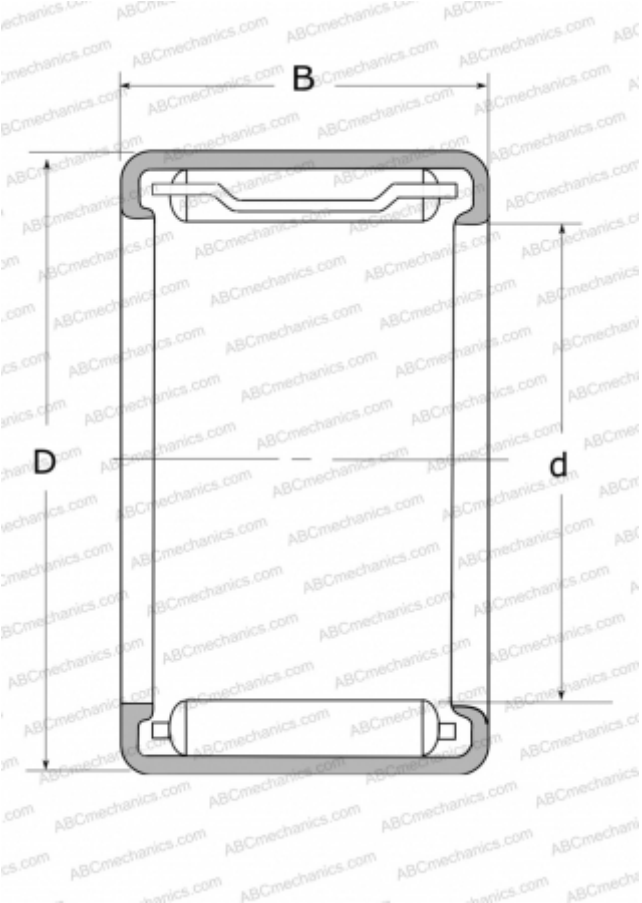

Technical specification

DIMENSIONS, MM	
d	4,762
D	8,731
B	9,520
WEIGHT, KG	0,002
MANUFACTURER	NSK