NAF 152813 NSK

Needle roller bearings

TYPE: Roller bearings, Needle, Single row, Solid needle roller bearing, with inner ring, type NAF (NSK)

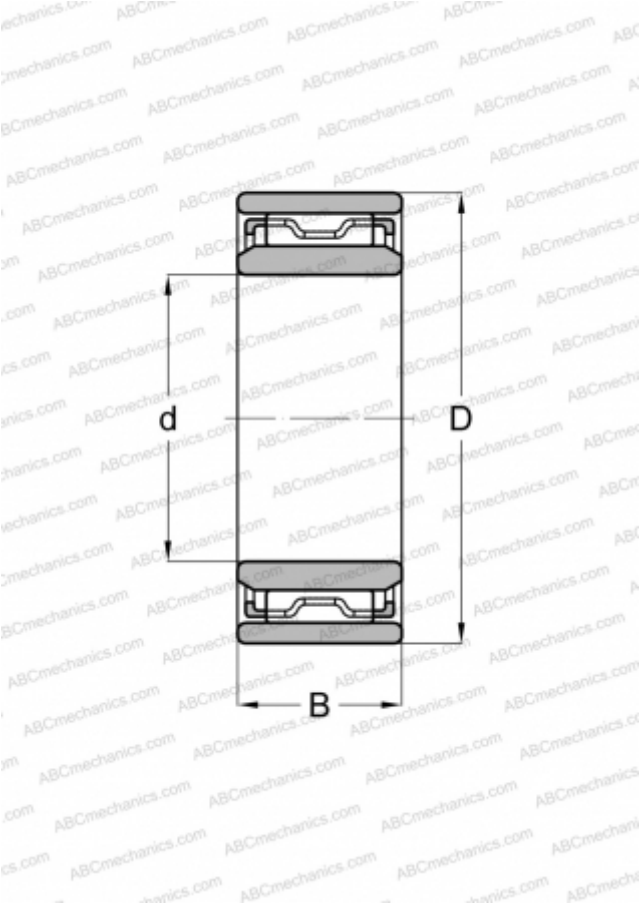

Technical specification

DIMENSIONS, MM	
d	20,000
D	28,000
B	13,000
WEIGHT, KG	0,040
MANUFACTURER	NSK