NA 6904 TT NSK

Needle roller bearings

TYPE: Roller bearings, Needle, Single row, Solid needle roller bearing, with inner ring, sealed, type NA..TT (NSK)

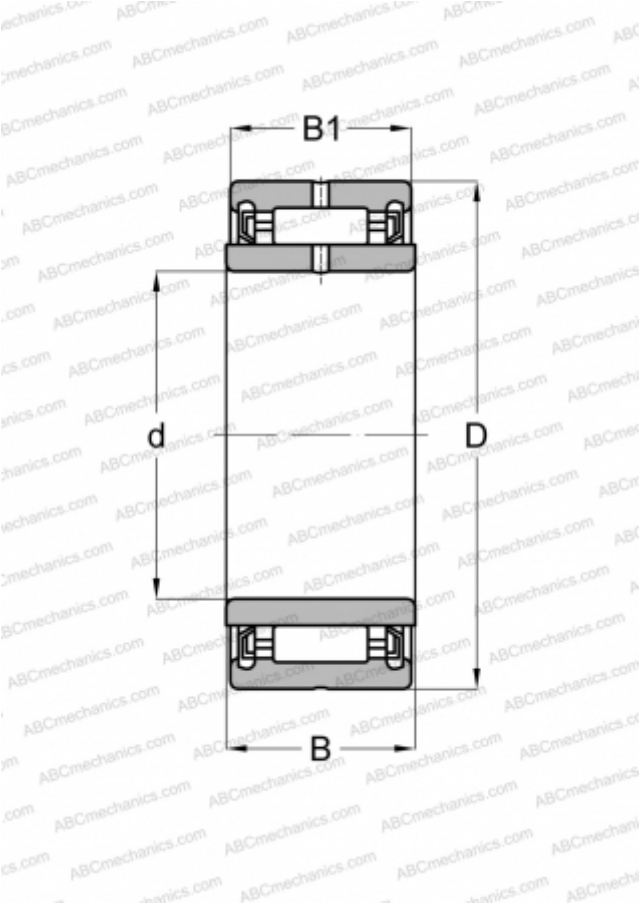

Technical specification

DIMENSIONS, MM	
d	25,000
D	37,000
B	30,000
WEIGHT, KG	0,140
MANUFACTURER	NSK