# JT-56 TORRINGTON

Needle roller bearings

TYPE: Roller bearings, Needle, Single row, Open end, inch size, caged shell, one seal (KOYO-TORRINGTON)

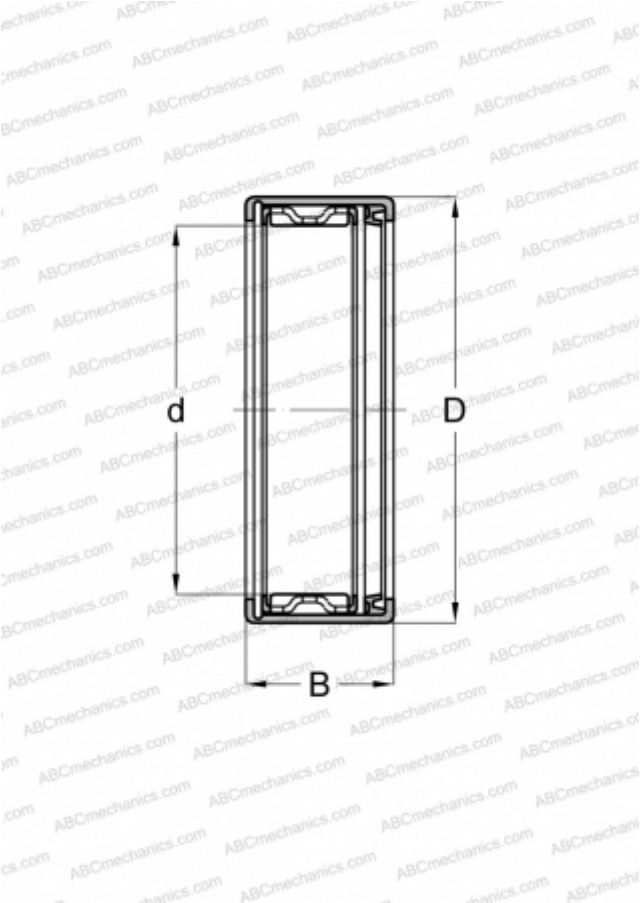


## Technical specification

| | |
|---|---|
| **DIMENSIONS, MM** | |
| d | 7,938 |
| D | 12,700 |
| B | 9,525 |
| **WEIGHT, KG** | 0,004 |
| **MANUFACTURER** | TORRINGTON |
| **INTERCHANGE** | |
| KOYO | JT-56 |