JTT-67 TORRINGTON

Needle roller bearings

TYPE: Roller bearings, Needle, Single row, Open end, inch size, caged shell, seal on both side (KOYO-TORRINGTON)

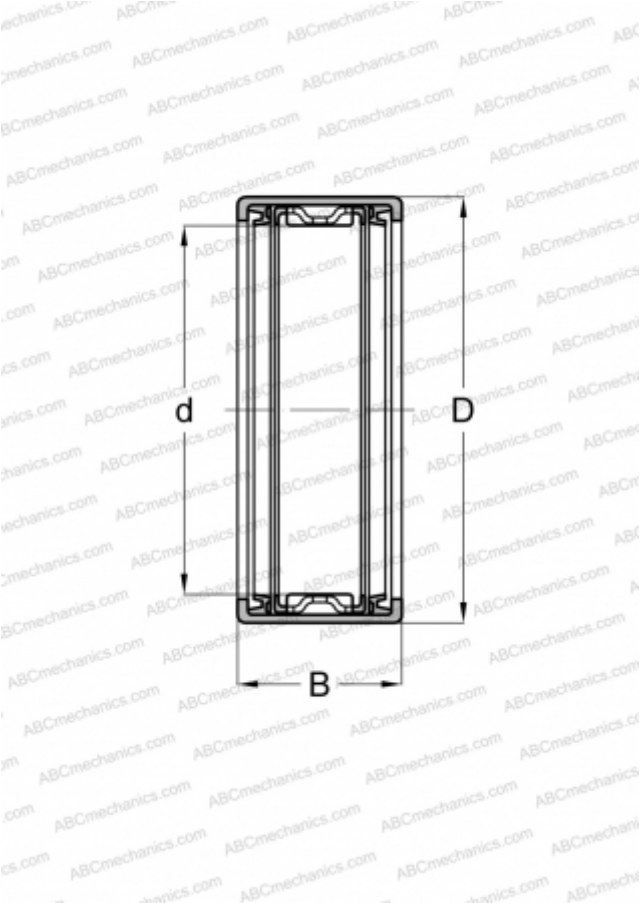

Technical specification

DIMENSIONS, MM	
d	9,525
D	14,288
B	11,125
WEIGHT, KG	0,005
MANUFACTURER	TORRINGTON
INTERCHANGE	
KOYO	JTT-67