FYCJ20R NSK

Yoke type track roller

TYPE: Roller bearings, Yoke type track rollers, With axial guidance, With cage, outer ring has a spherical outside surface, type FYCJ..R (NSK)

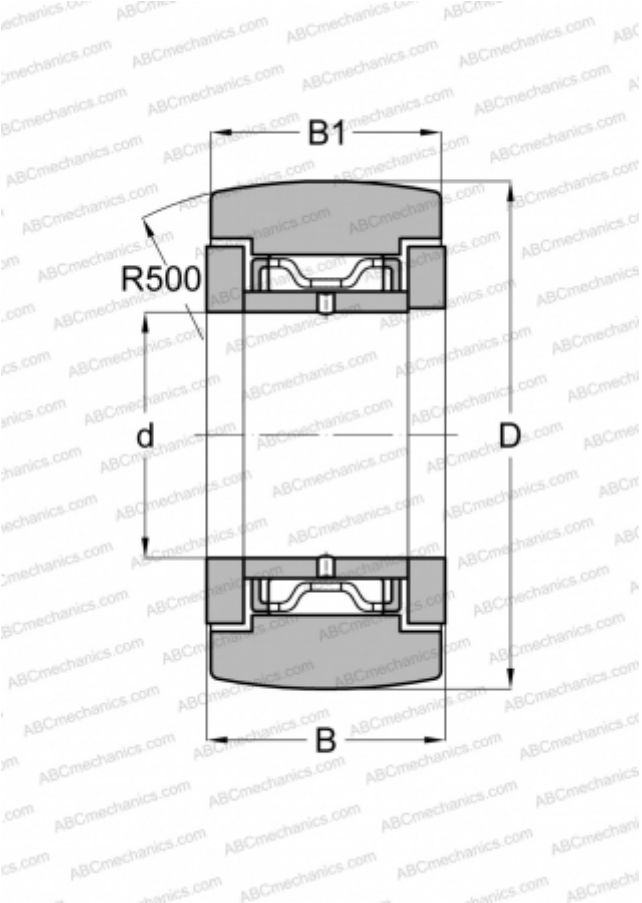

Technical specification

DIMENSIONS, MM	
d	20,000
D	47,000
B	25,000
B1	24,000
WEIGHT, KG	0,245
MANUFACTURER	NSK