FYCJ30 NSK

Yoke type track roller

TYPE: Roller bearings, Yoke type track rollers, With axial guidance, With cage, outer ring has a cylindrical outside surface, type FYCJ (NSK)

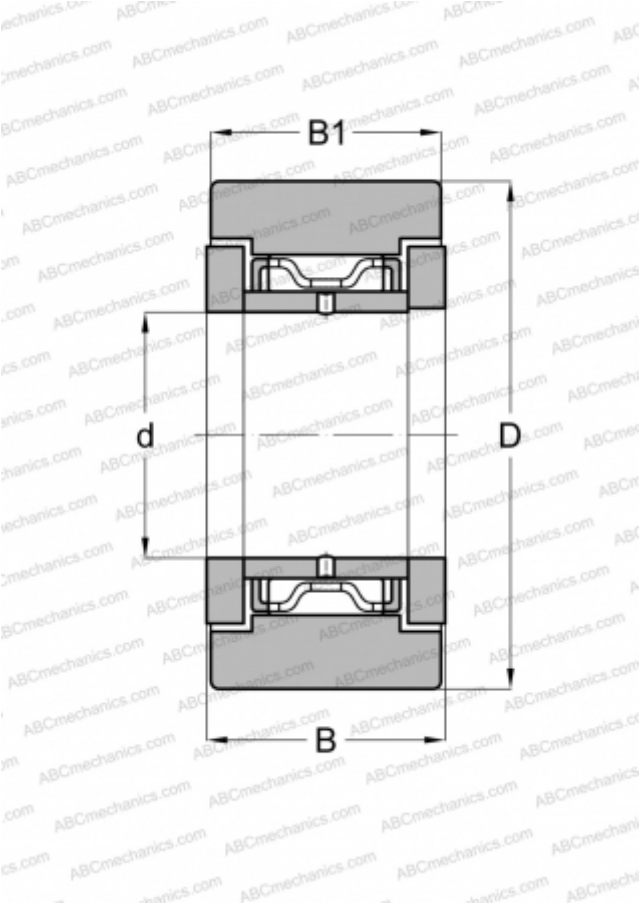

Technical specification

DIMENSIONS, MM	
d	30,000
D	62,000
B	29,000
B1	28,000
WEIGHT, KG	0,470
MANUFACTURER	NSK