YCR16 NSK

Yoke type track roller

TYPE: Roller bearings, Yoke type track rollers, With axial guidance, Full complement needle roller set, outer ring has a cylindrical outside surface, type YCR (NSK), inch size

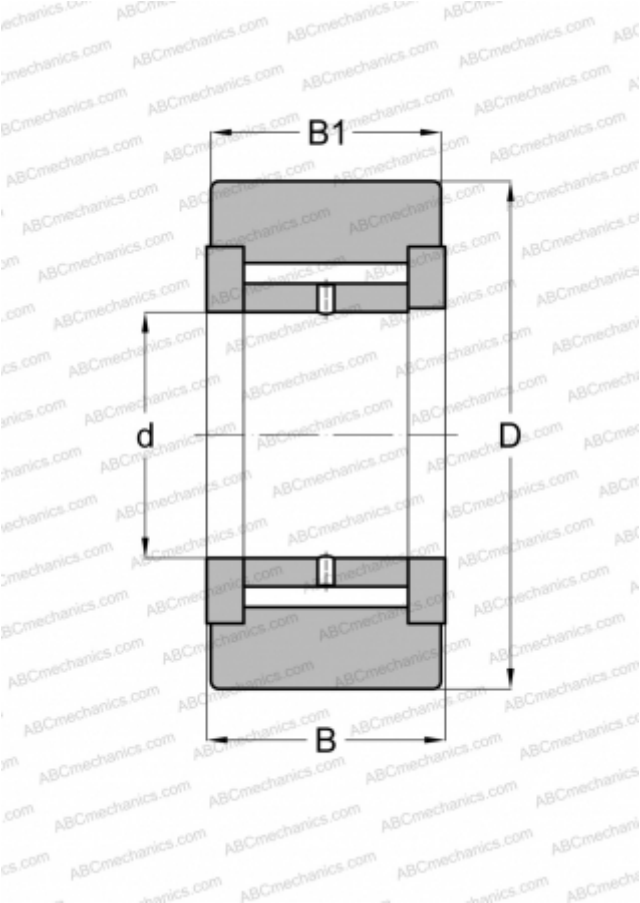

Technical specification

DIMENSIONS, MM	
d	7,938
D	25,400
B	17,460
B1	15,880
WEIGHT, KG	0,068
MANUFACTURER	NSK