CRSB 8-1 TORRINGTON

Cam followers

TYPE: Roller bearings, Stud type track rollers, Hex socket, contact seals on both side, cylindrical outer ring, inch size

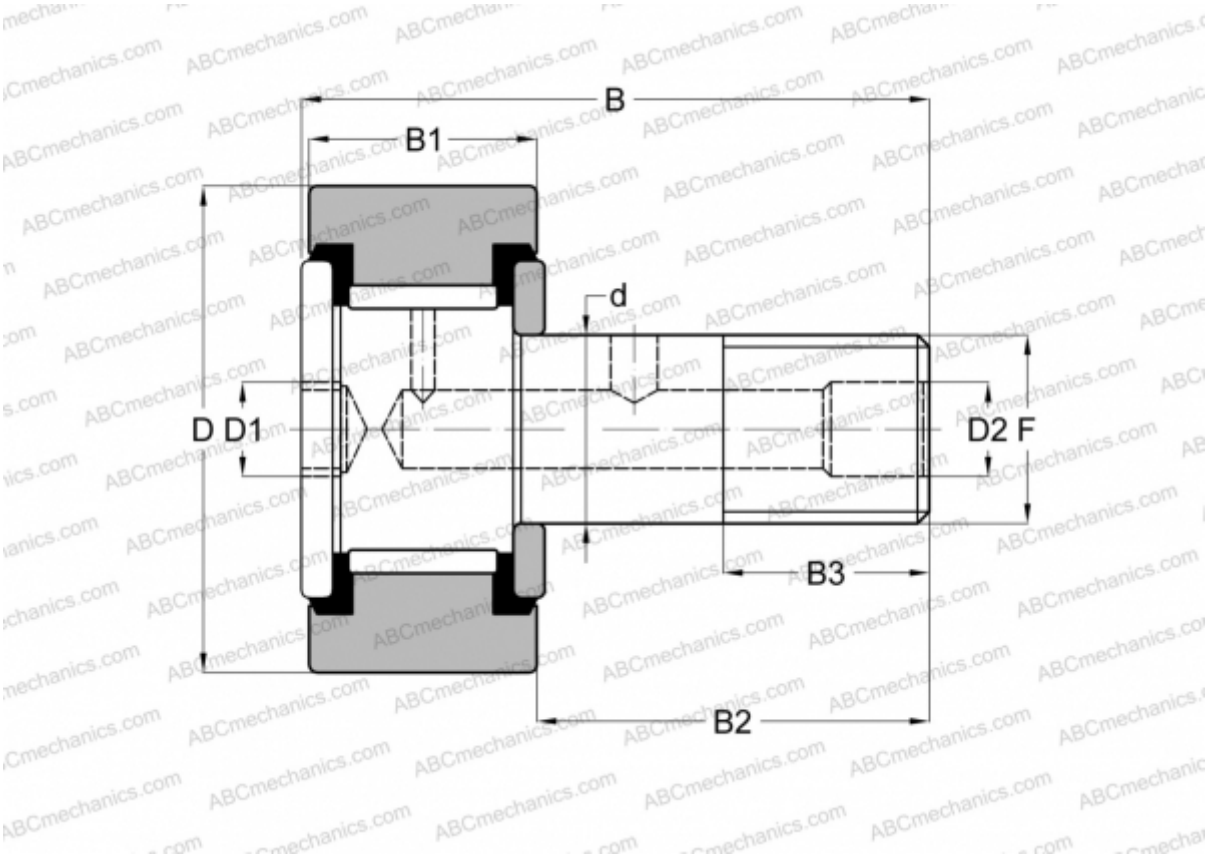

Technical specification

DIMENSIONS, MM	
d	4,826
D	12,700
D1	3,175
B	26,193
B1	9,525
B2	15,875
B3	6,350
F	10-32
WEIGHT, KG	0,014
MANUFACTURER	TORRINGTON

INTERCHANGE	
ABC	CRSB 8-1
INA	CF 8-1 PP

INTERCHANGE	
McGill	CF- 1/2 -SB
RBC	S 16 LW
SMITH BEARING	CR- 1/2 -XB