FCRS19 NSK

Cam followers

TYPE: Roller bearings, Stud type track rollers, With axial guidance, full complement bearing, with seal, with thrust washer, outer ring has a cylindrical outside surface, type FCRS (NSK)

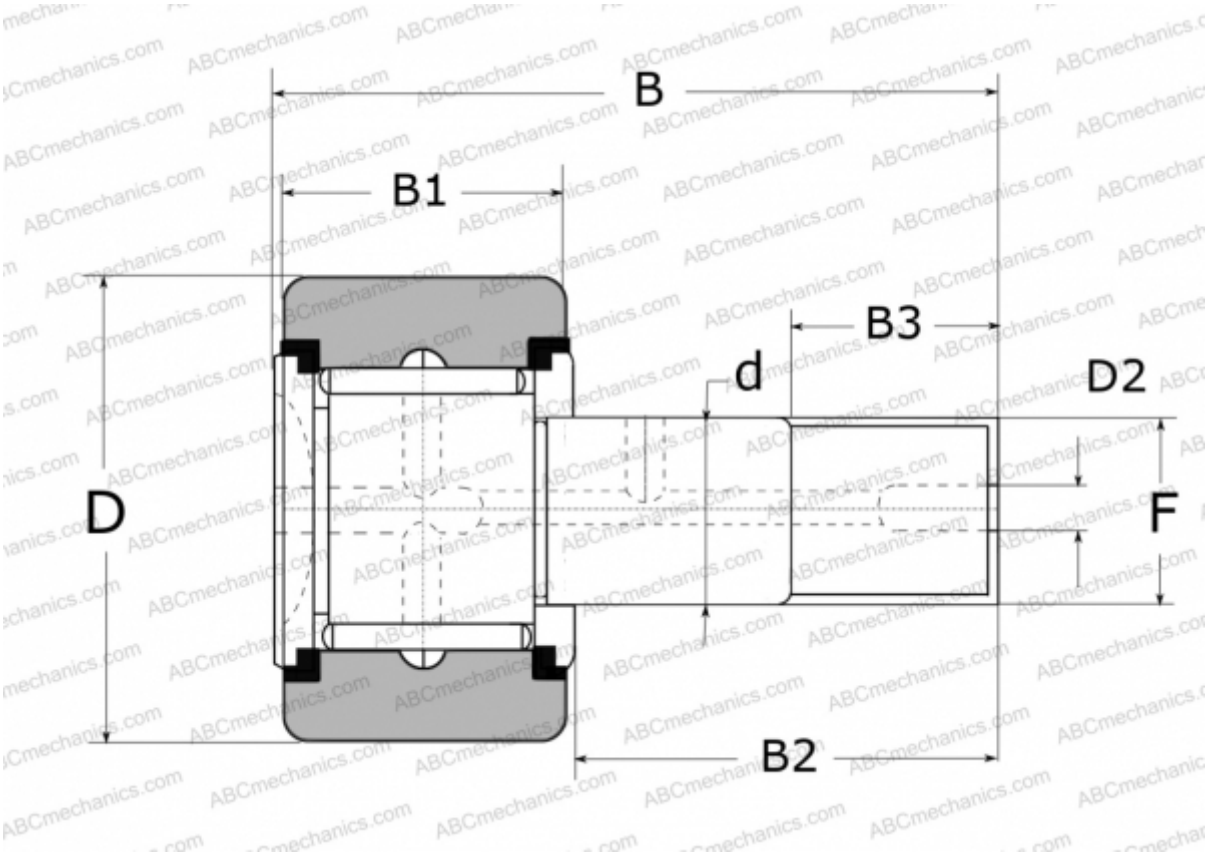

Technical specification

DIMENSIONS, MM	
d	8,000
D	19,000
D2	4,000
B	32,000
B1	11,000
B2	20,000
B3	10,000
F	M8X1.25
WEIGHT, KG	0,031
MANUFACTURER	NSK

REPLACES
FCRS-19