CR16R NSK

Cam followers

TYPE: Roller bearings, Stud type track rollers, With axial guidance, full complement bearing, outer ring has a spherical outside surface, type CR..R (NSK), inch size

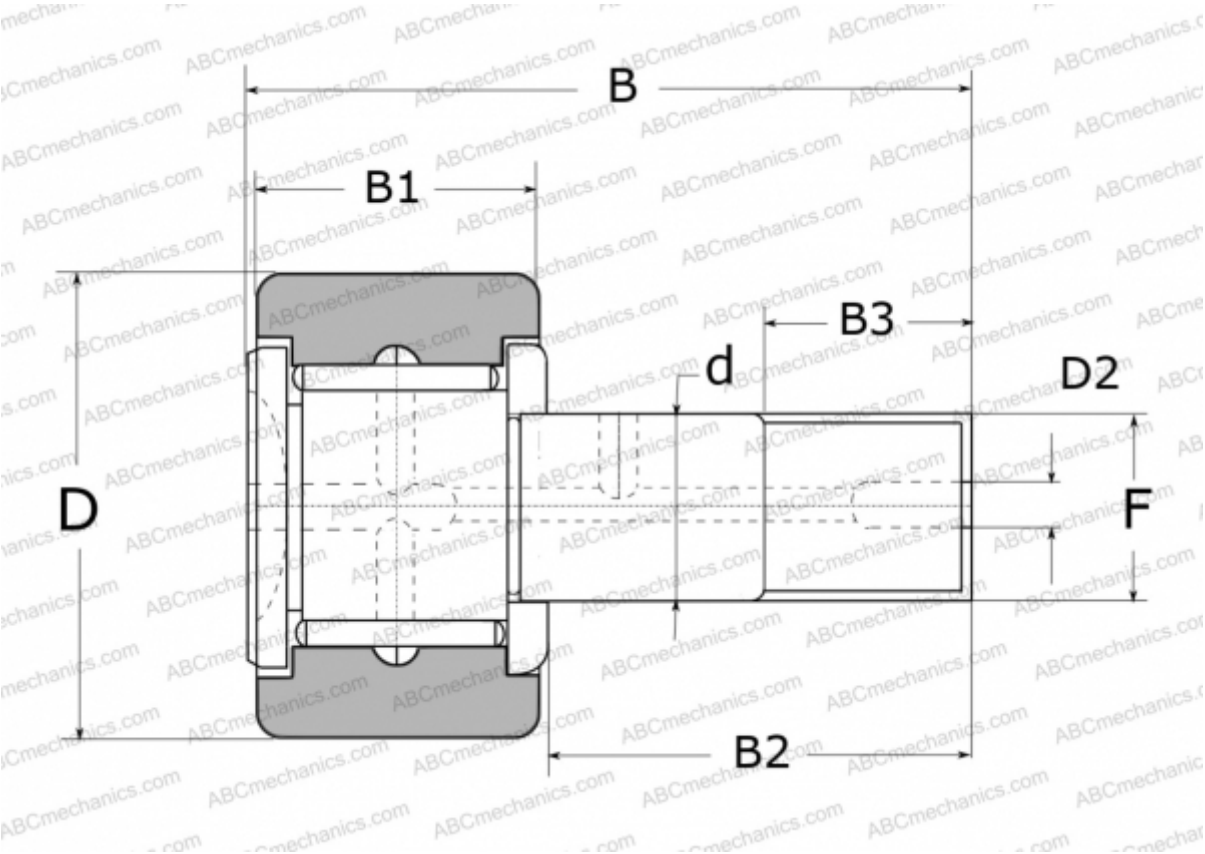

Technical specification

DIMENSIONS, MM	
d	11,112
D	25,400
D2	4,800
B	42,400
B1	15,880
B2	25,400
B3	12,700
F	7/16-20
WEIGHT, KG	0,073
MANUFACTURER	NSK

REPLACES
CR-16 R