CRS10 NSK

Cam followers

TYPE: Roller bearings, Stud type track rollers, With axial guidance, full complement bearing, with seal, with thrust washer, outer ring has a cylindrical outside surface, type CRS (NSK), inch size

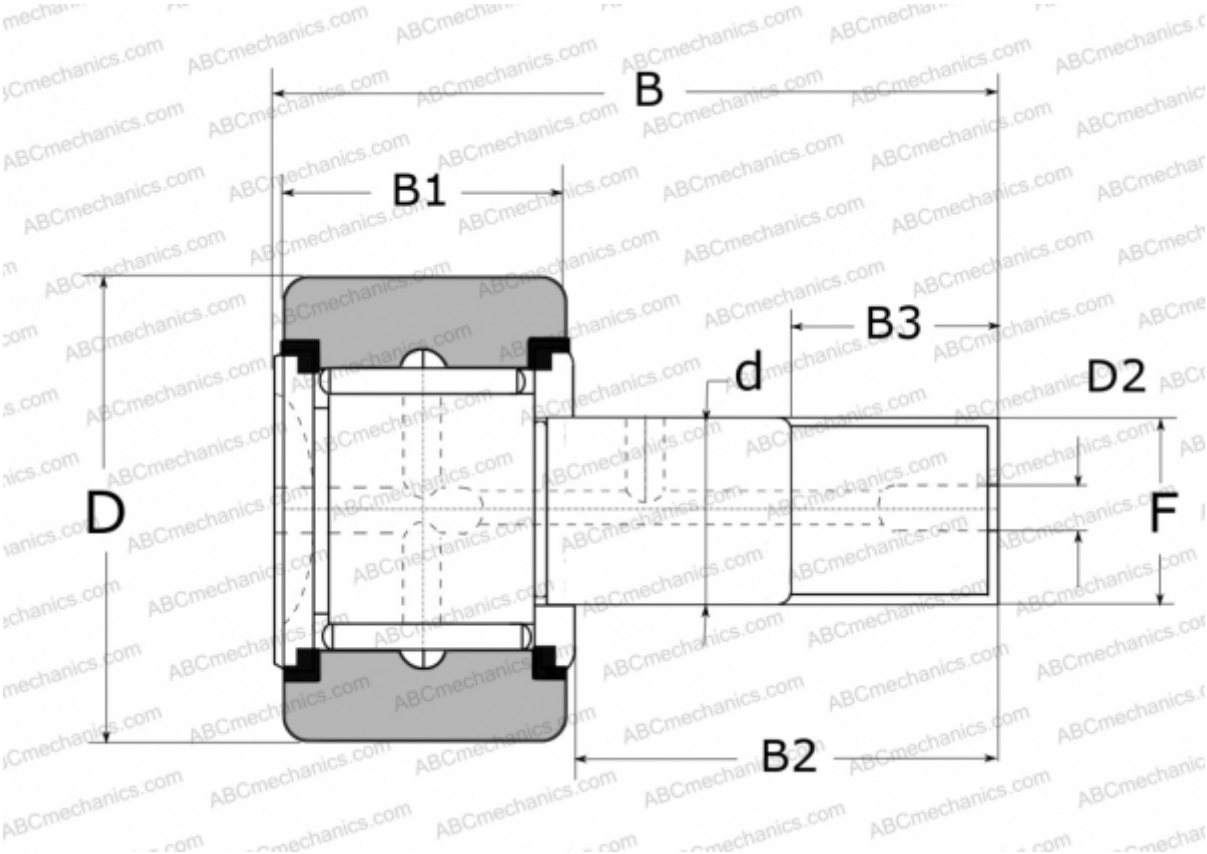

Technical specification

DIMENSIONS, MM	
d	6,350
D	15,875
D2	3,200
B	27,300
B1	10,310
B2	15,880
B3	7,900
F	1/4-28
WEIGHT, KG	0,019
MANUFACTURER	NSK

REPLACES
CRS-10