67390.325D TIMKEN

Tapered roller bearings

TYPE: Roller bearings, Tapered, Double row, O-arrangement, inch size, design 1 (FAG)

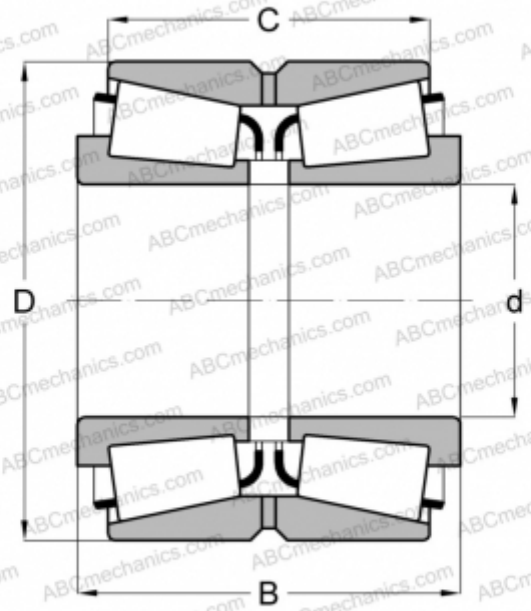

Technical specification

DIMENSIONS, MM	
d	133,350
D	200,025
B	101,600
C	85,725
WEIGHT, KG	11,100
MANUFACTURER	TIMKEN
INTERCHANGE	
FAG	540157