LL686947.910D TIMKEN

Tapered roller bearings

TYPE: Roller bearings, Tapered, Double row, O-arrangement, inch size, design 3 (FAG)

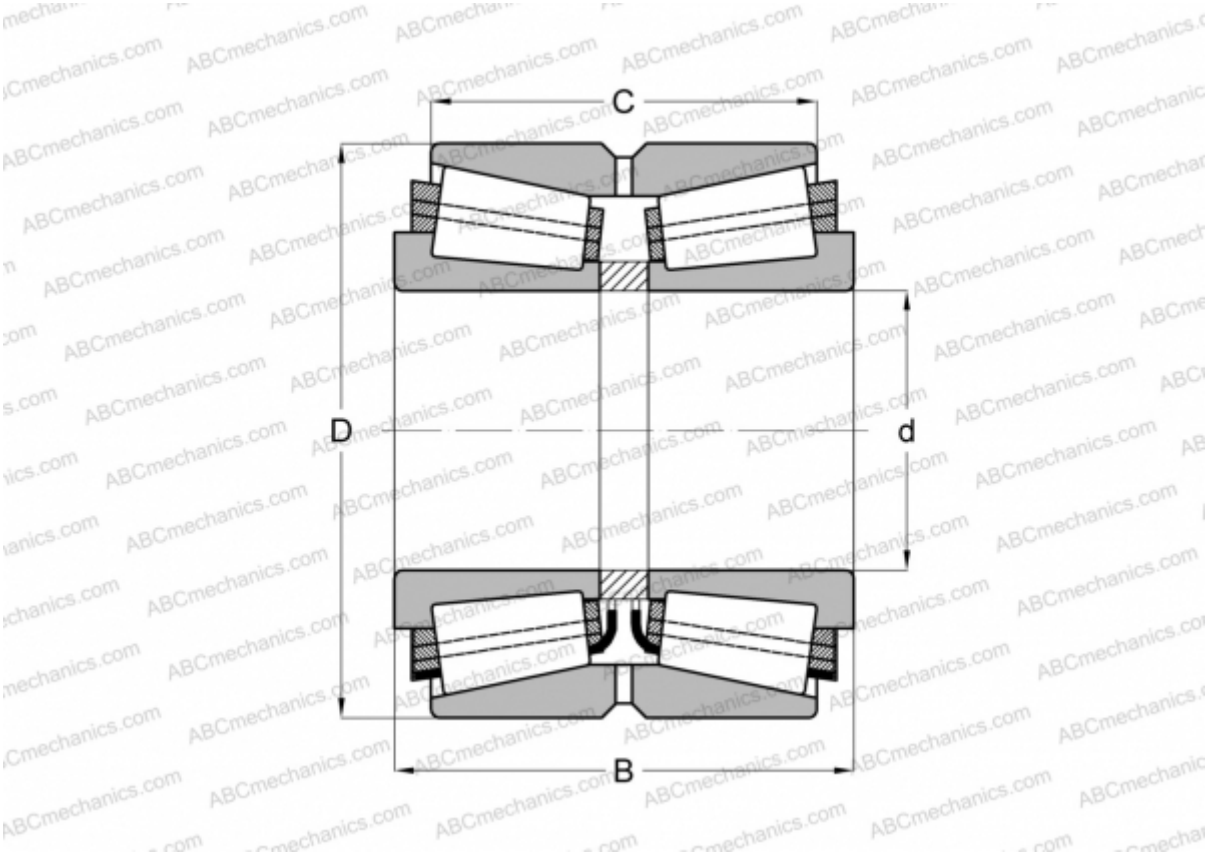

Technical specification

DIMENSIONS, MM	
d	914,400
D	1066,800
B	139,700
C	101,600
WEIGHT, KG	200,000
MANUFACTURER	TIMKEN
INTERCHANGE	
FAG	579565