514164 FAG

Tapered roller bearings

TYPE: Roller bearings, Tapered, Double row, O-arrangement, metric size, design 1 (FAG)

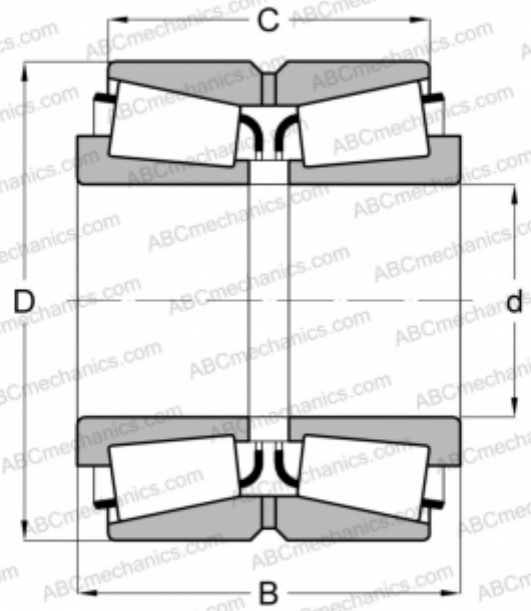

Technical specification

DIMENSIONS, MM	
d	260,000
D	400,000
B	150,000
C	110,000
WEIGHT, KG	60,900
MANUFACTURER	FAG