74025/74052G GAMET

Tapered roller bearings

TYPE: Roller bearings, Tapered, Precision, GAMET type G, double-row

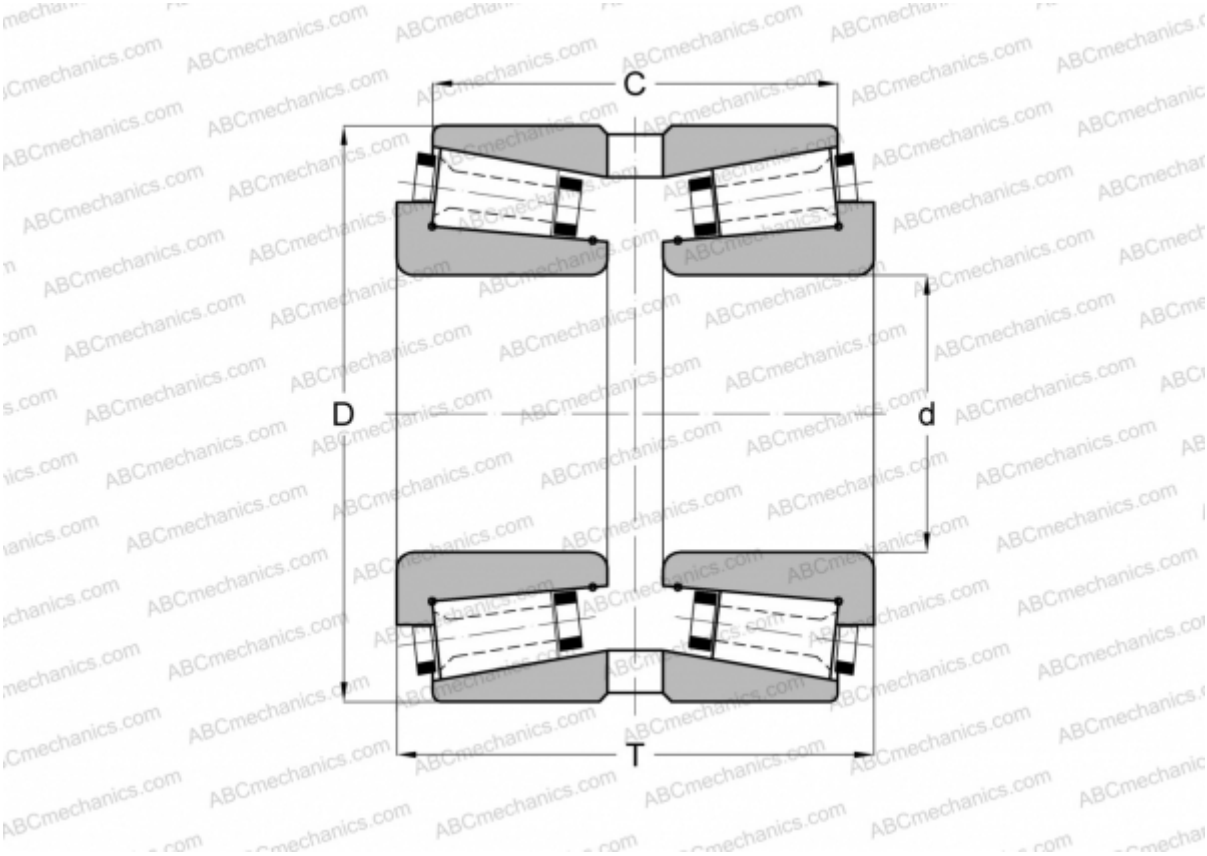

Technical specification

DIMENSIONS, MM	
d	25,000
D	52,000
T	43,000
C	36,500
WEIGHT, KG	0,460
MANUFACTURER	GAMET