100031X/100076XG GAMET

Tapered roller bearings

TYPE: Roller bearings, Tapered, Precision, GAMET type G, double-row

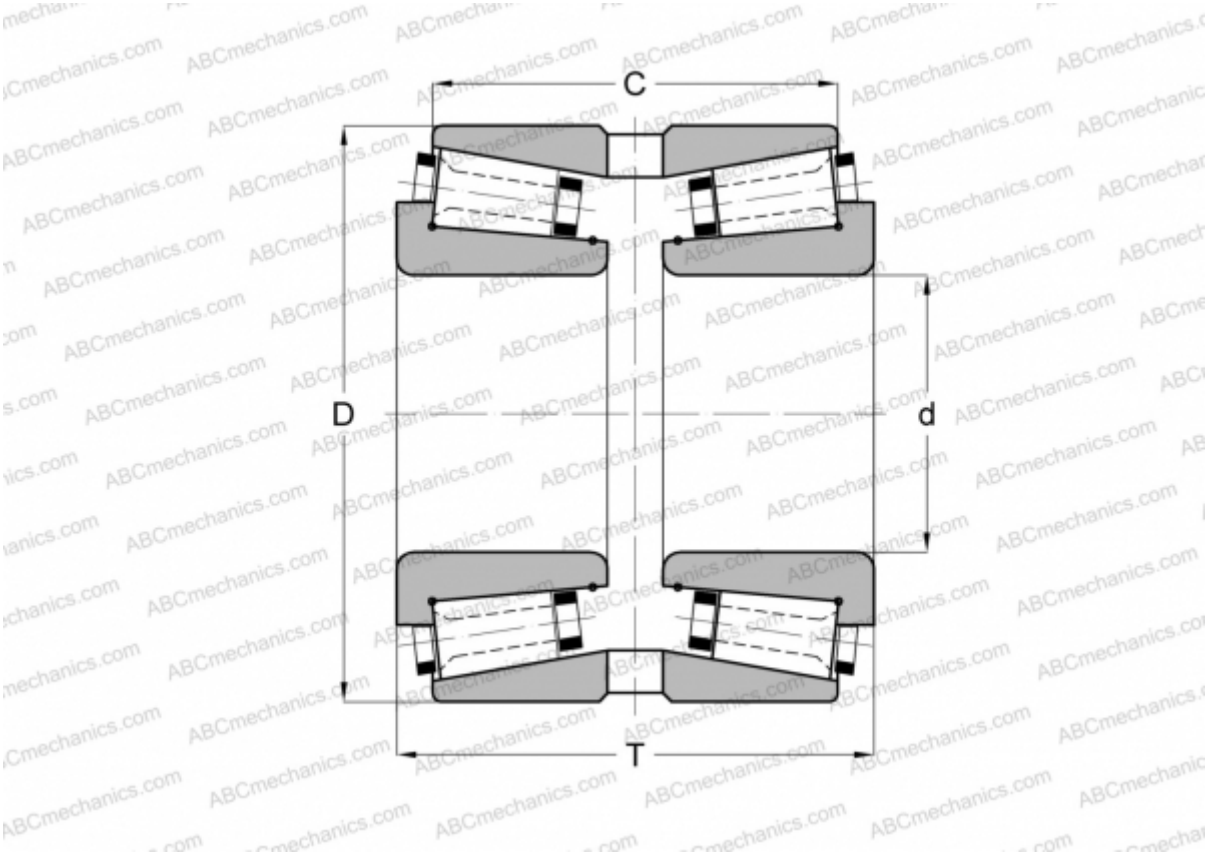

Technical specification

DIMENSIONS, MM	
d	31,750
D	76,200
T	57,000
C	46,500
WEIGHT, KG	0,825
MANUFACTURER	GAMET