538585 FAG

Tapered roller bearings

TYPE: Roller bearings, Tapered, Four row, Inch size, design 1 (FAG)

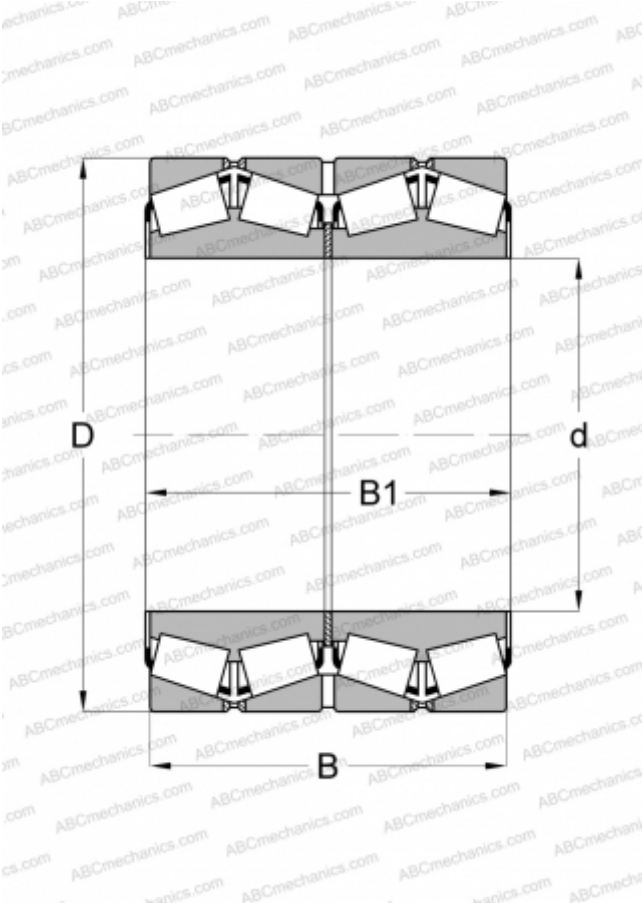

Technical specification

DIMENSIONS, MM	
d	120,650
D	174,625
B	139,703
B1	141,288
WEIGHT, KG	11,000
MANUFACTURER	FAG
INTERCHANGE	
TIMKEN	M224749DW.710.710D