48680DW.620.620D TIMKEN

Tapered roller bearings

TYPE: Roller bearings, Tapered, Four row, Inch size, design 1 (FAG)

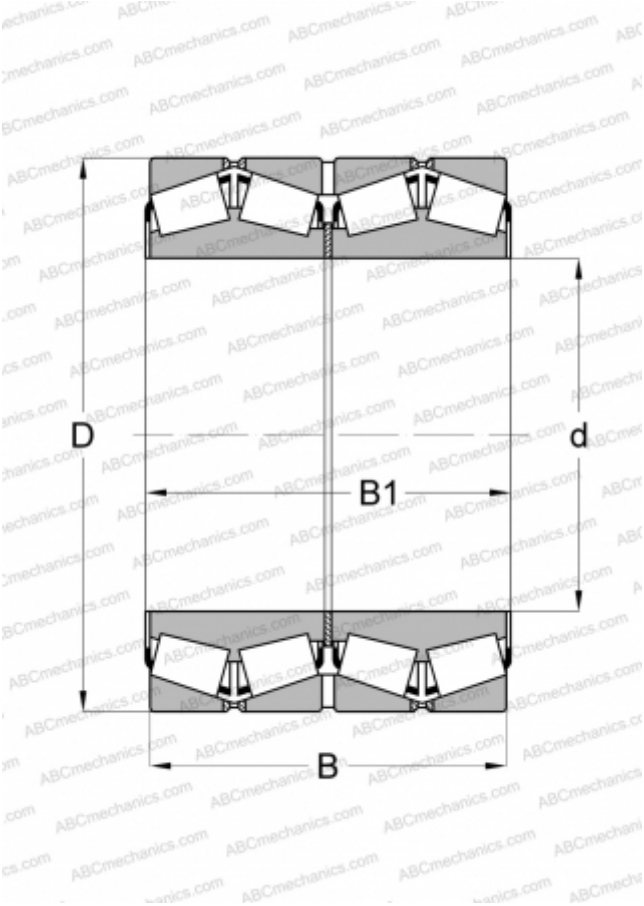

Technical specification

DIMENSIONS, MM	
d	139,700
D	200,025
B	160,340
B1	157,165
WEIGHT, KG	17,000
MANUFACTURER	TIMKEN
INTERCHANGE	
FAG	802227