564155 FAG

Tapered roller bearings

TYPE: Roller bearings, Tapered, Four row, With extended cones (FAG)

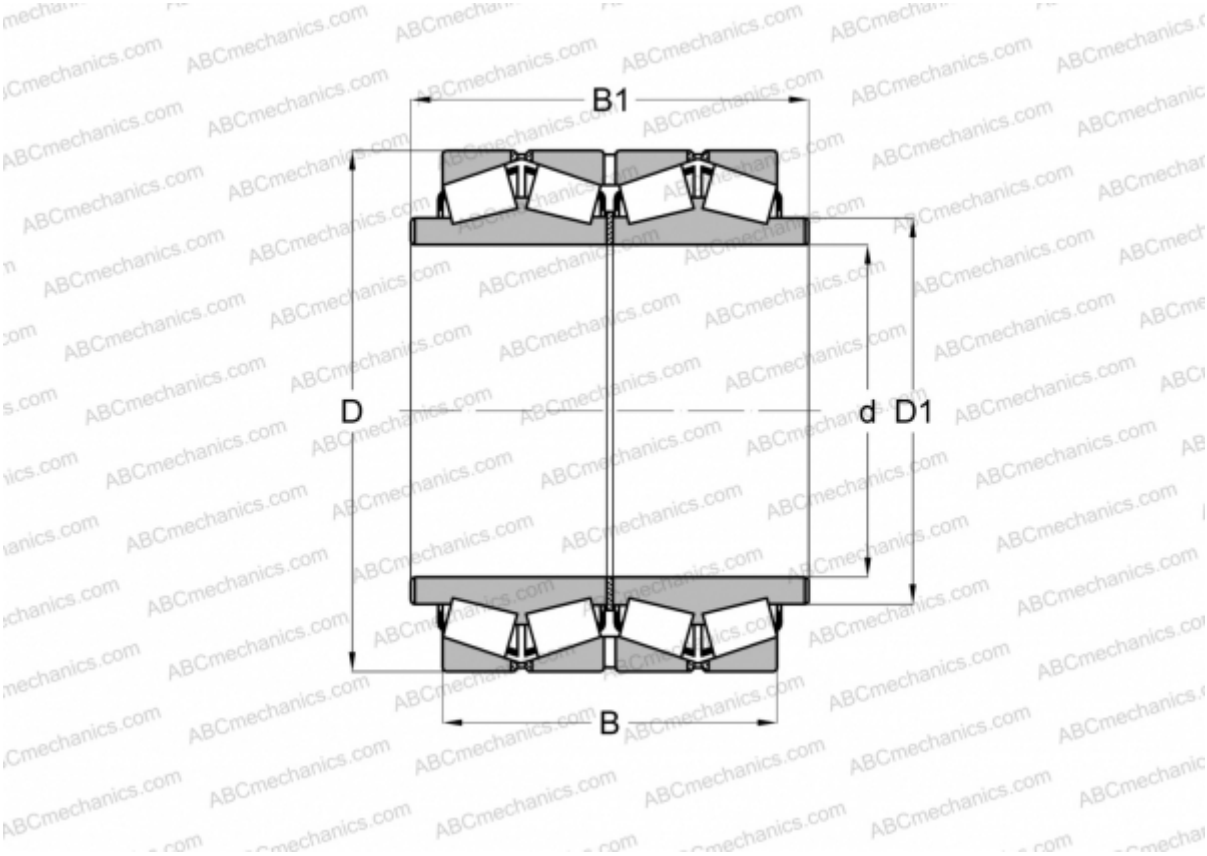

Technical specification

DIMENSIONS, MM	
d	374,650
D	501,650
D1	400,050
B	260,350
B1	323,850
WEIGHT, KG	154,000
MANUFACTURER	FAG