23140B.568923 FAG

Spherical roller bearings

TYPE: Roller bearings, Spherical, Double row, For bar mills, for loose fit on the roll neck, design 2 (FAG)

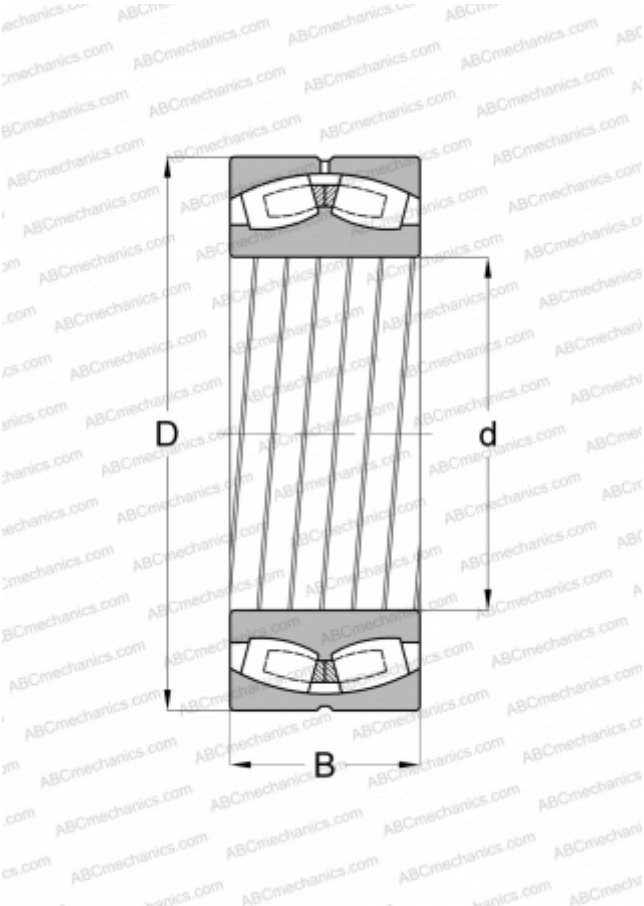

Technical specification

DIMENSIONS, MM	
d	200,000
D	340,000
B	112,000
WEIGHT, KG	42,800
MANUFACTURER	FAG