20FSF35 NSK

Spherical plain bearings

TYPE: Plain bearings, Spherical plain bearings and rod ends, Radial spherical plain bearings, Requiring maintenance, Series FSF (NSK)

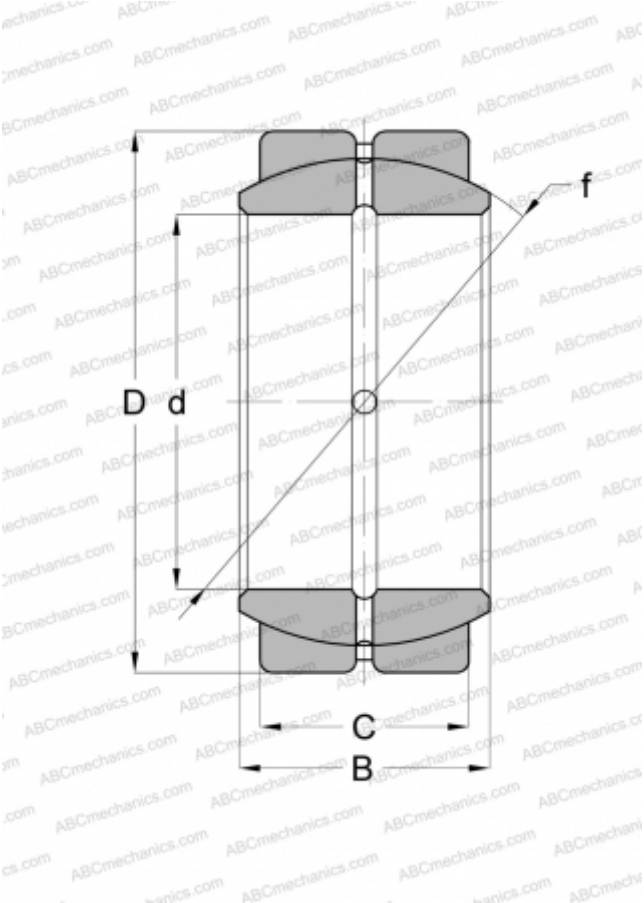

Technical specification

DIMENSIONS, MM	
d	20,000
D	35,000
B	16,000
f	29,000
C	12,000

WEIGHT, KG	0,065
MANUFACTURER	NSK