25FSF42-1 NSK

Spherical plain bearings

TYPE: Plain bearings, Spherical plain bearings and rod ends, Radial spherical plain bearings, Requiring maintenance, Series FSF (NSK)

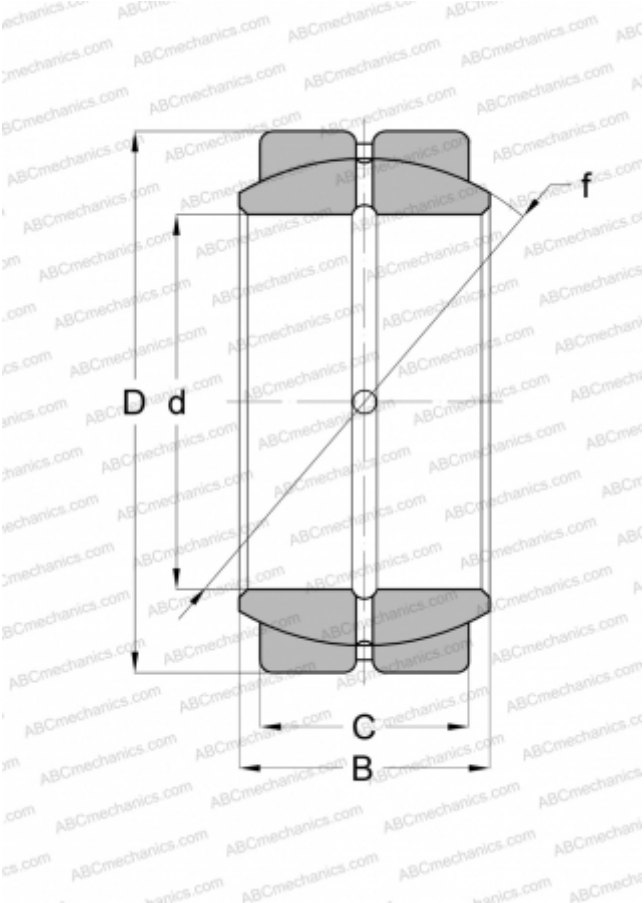

Technical specification

DIMENSIONS, MM	
d	25,000
D	42,000
B	21,000
f	36,000
C	18,000

WEIGHT, KG	0,130
MANUFACTURER	NSK