GLXS 18 FLURO

Spherical plain bearings

TYPE: Plain bearings, Spherical plain bearings and rod ends, Radial spherical plain bearings, Requiring maintenance, Series GLXS (FLURO)

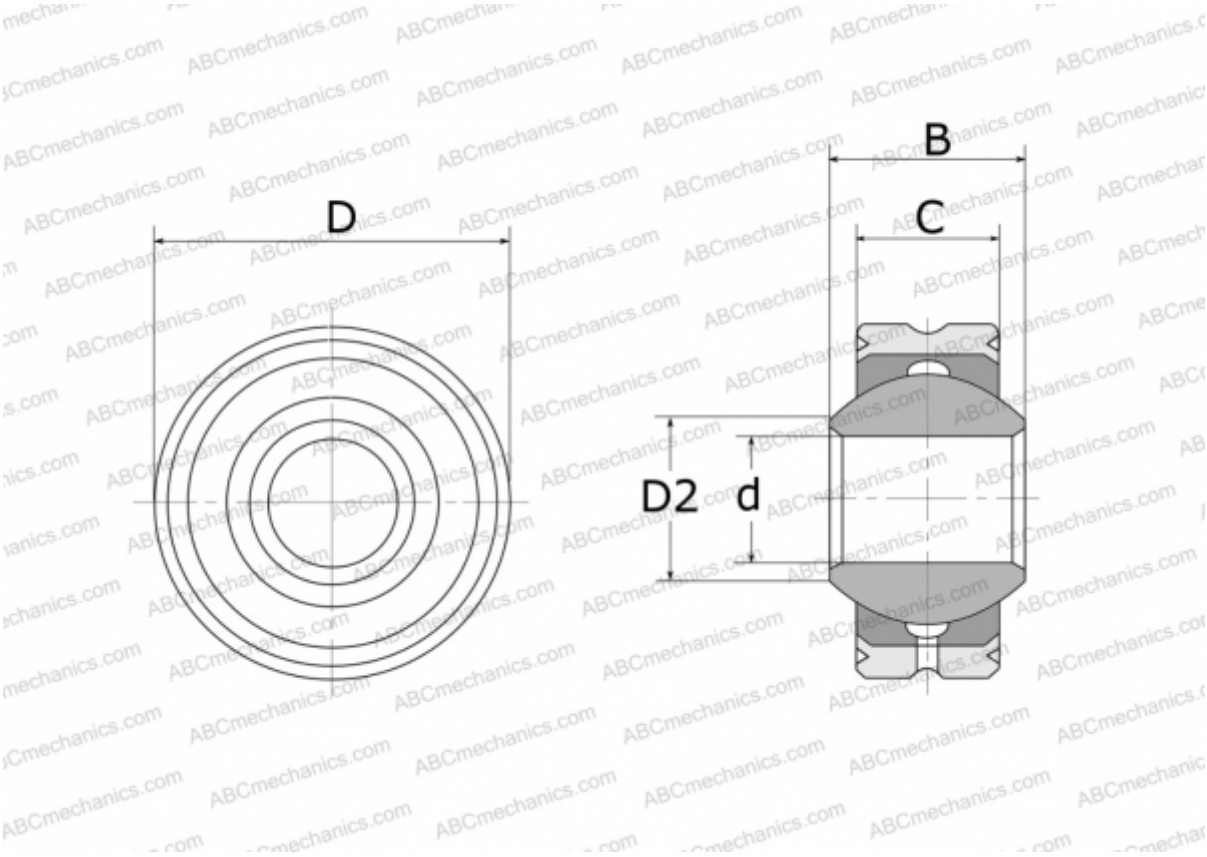

Technical specification

DIMENSIONS, MM	
d	18,000
D	42,000
D2	21,800
B	23,000
C	16,500
WEIGHT, KG	0,150
MANUFACTURER	FLURO