GE 20 E-2RS FLURO

Spherical plain bearings

TYPE: Plain bearings, Spherical plain bearings and rod ends, Radial spherical plain bearings, Requiring maintenance, Series GE..E-2RS (FLURO)

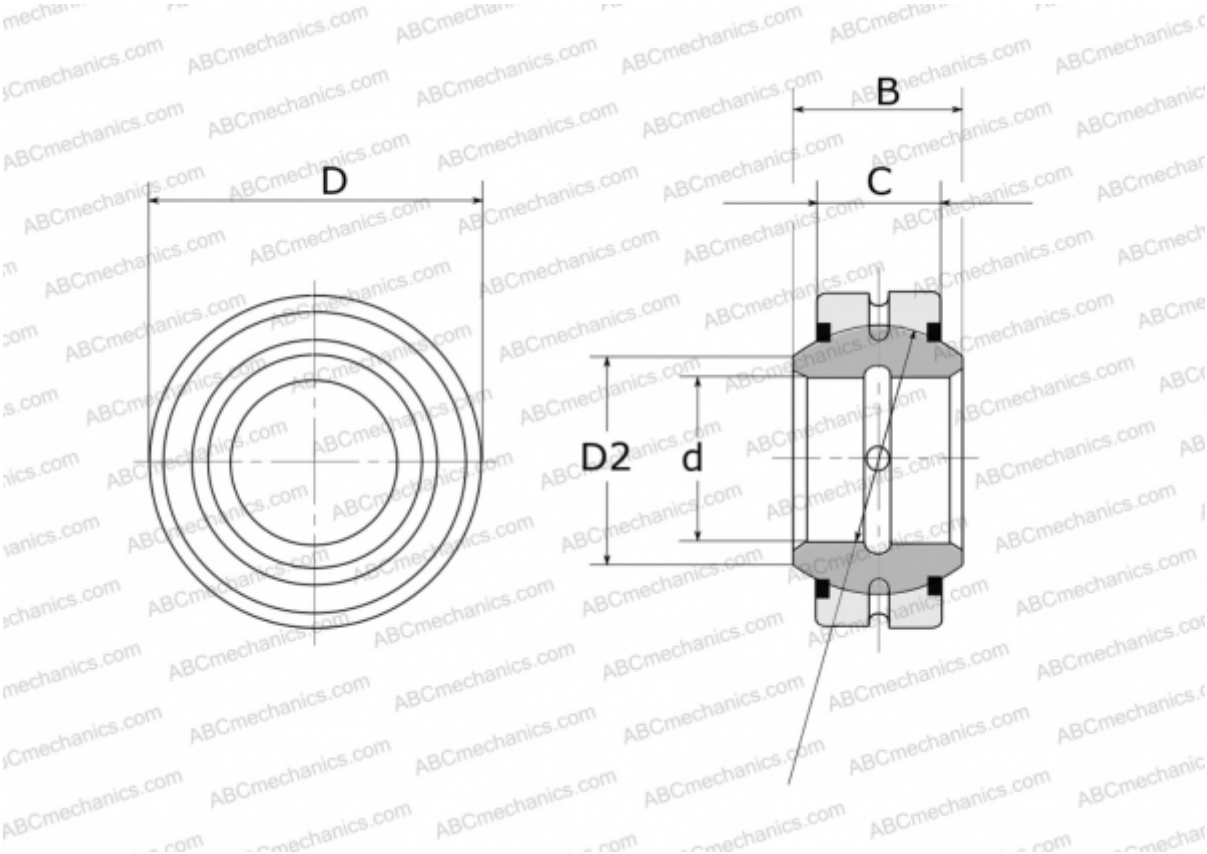

Technical specification

DIMENSIONS, MM	
d	20,000
D	35,000
D2	24,100
B	16,000
f	29,000
C	12,000
WEIGHT, KG	0,064
MANUFACTURER	FLURO