GE 45 E-2RS FLURO

Spherical plain bearings

TYPE: Plain bearings, Spherical plain bearings and rod ends, Radial spherical plain bearings, Requiring maintenance, Series GE..E-2RS (FLURO)

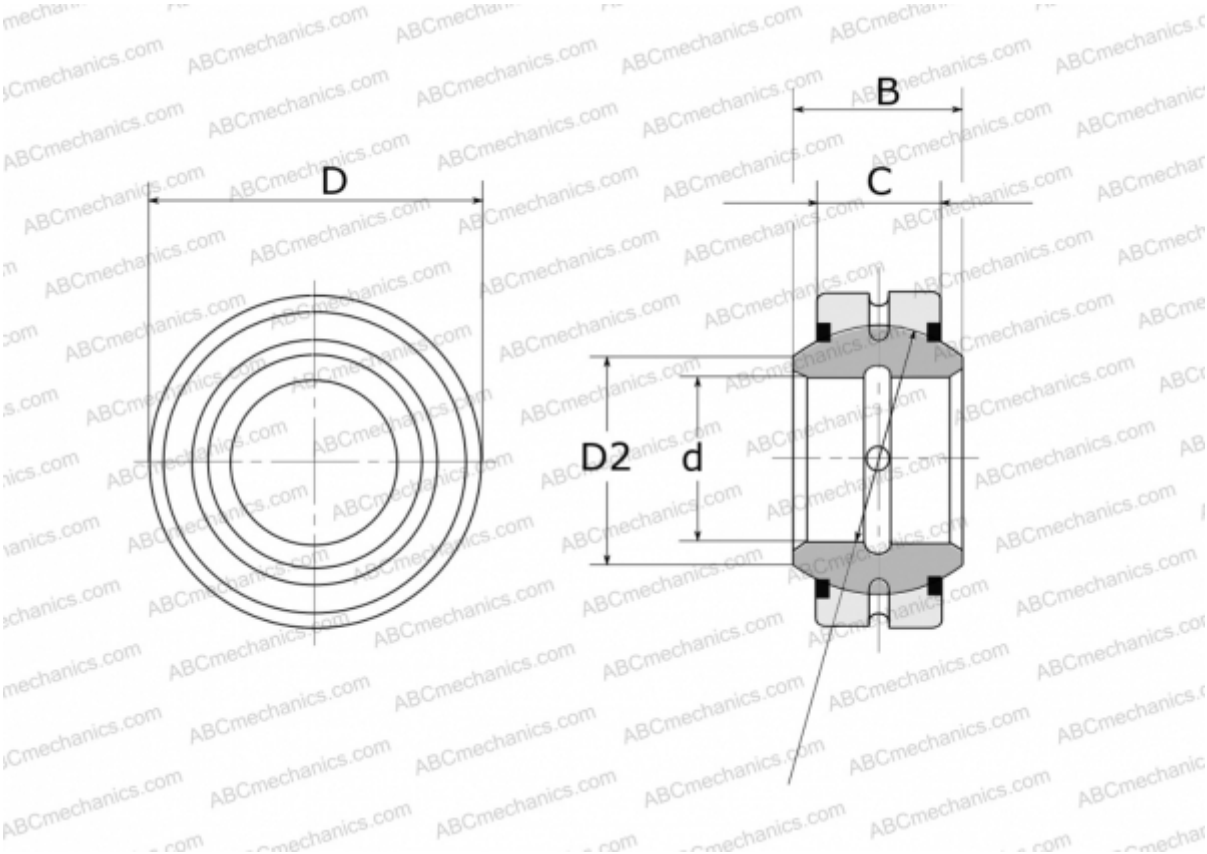

Technical specification

DIMENSIONS, MM	
d	45,000
D	68,000
D2	50,700
B	32,000
f	60,000
C	25,000
WEIGHT, KG	0,421
MANUFACTURER	FLURO