GE 35 FO-2RS FLURO

Spherical plain bearings

TYPE: Plain bearings, Spherical plain bearings and rod ends, Radial spherical plain bearings, Requiring maintenance, Series GE..-FO-2RS (FLURO), contact seals on both side

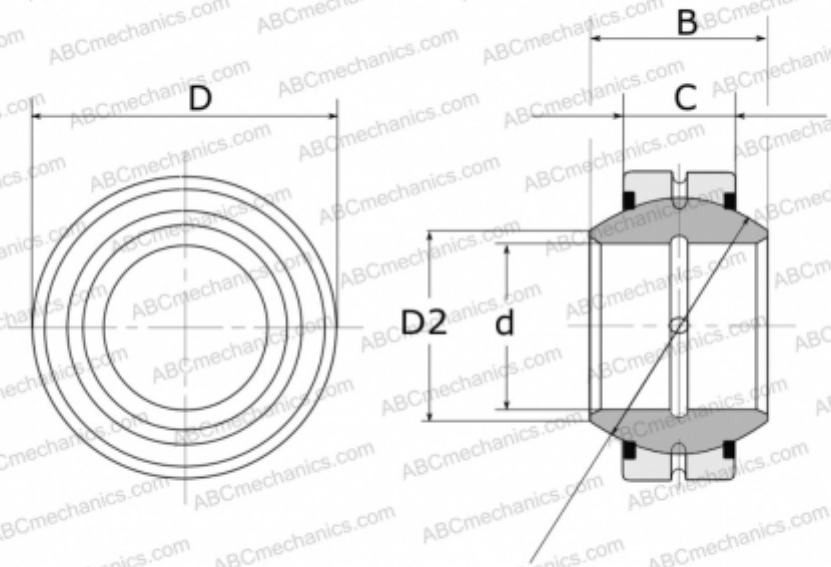

Technical specification

DIMENSIONS, MM	
d	35,000
D	62,000
D2	39,700
B	35,000
f	53,000
C	22,000
WEIGHT, KG	0,402
MANUFACTURER	FLURO