GE 30 AX FLURO

Spherical plain bearings

TYPE: Plain bearings, Spherical plain bearings and rod ends, Thrust spherical plain bearings, Requiring maintenance, Series GE..-AX (FLURO)

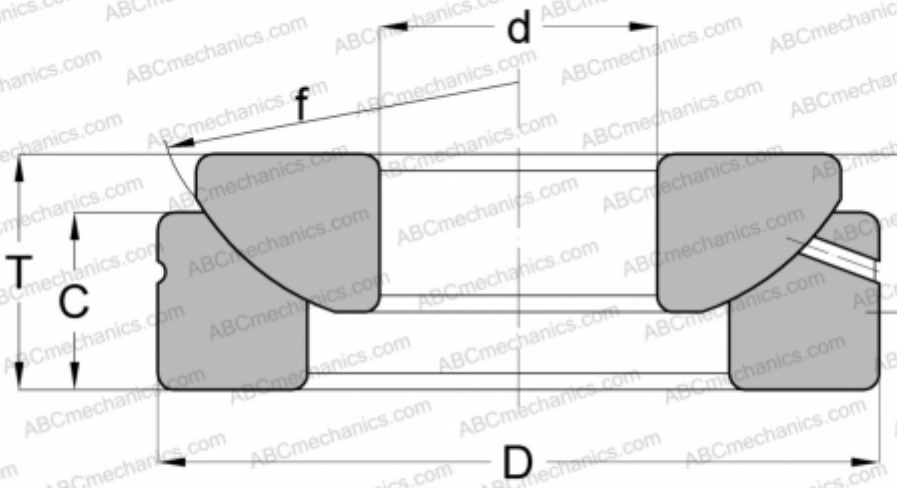

Technical specification

DIMENSIONS, MM	
d	30,000
D	75,000
B	19,000
f	82,000
T	26,000
C	19,000
WEIGHT, KG	0,614
MANUFACTURER	FLURO