GIXSW 18 FLURO

TYPE: Plain bearings, Spherical plain bearings and rod ends, Rod ends, Maintenance free, With internal thread, open design, right hand thread, series GIXSW (FLURO)

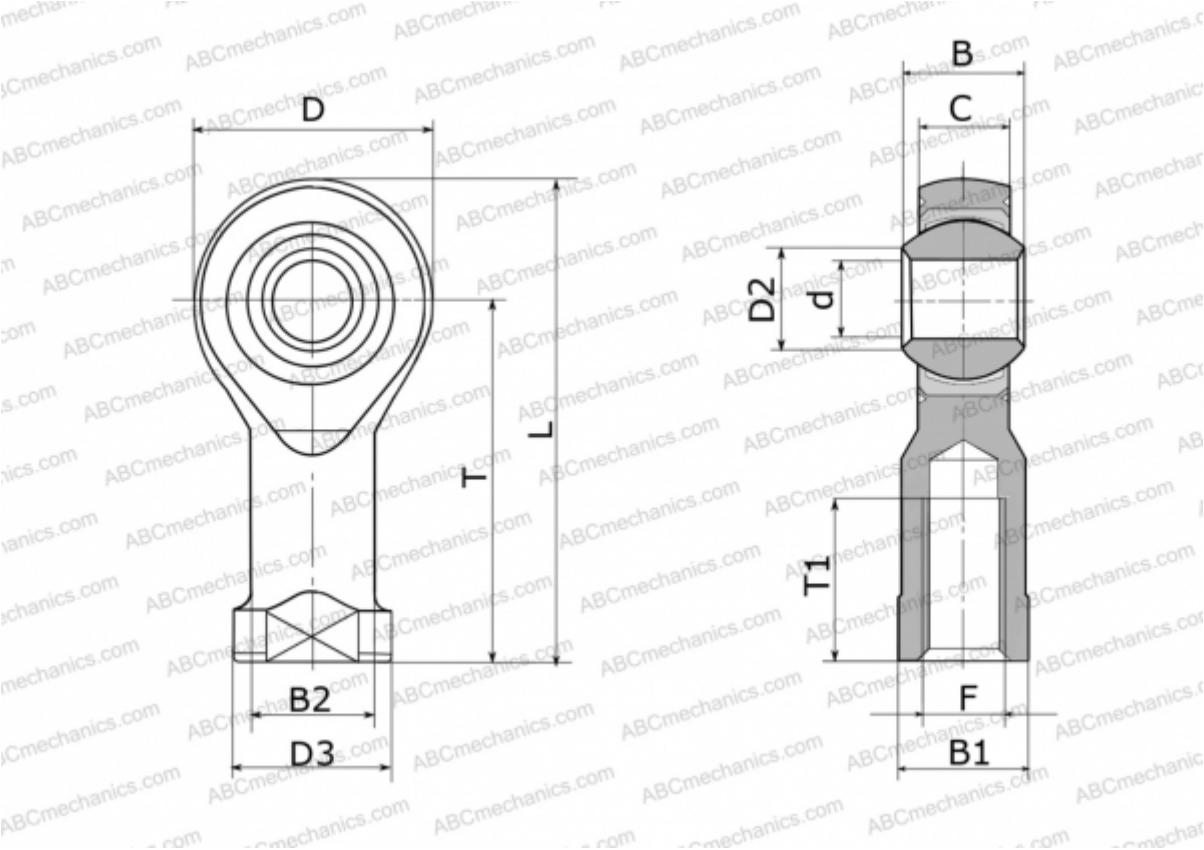

Technical specification

DIMENSIONS, MM	
d	18,000
D	46,000
D2	21,800
D3	31,000
B	23,000
B1	27,000
B2	25,000
L	94,000
T	71,000
T1	32,000
C	16,500
F	M 18x1.5
WEIGHT, KG	0,320

MANUFACTURER	FLURO