GALXSW 18 FLURO

TYPE: Plain bearings, Spherical plain bearings and rod ends, Rod ends, Maintenance free, With external thread, open design, left hand thread, series GALXSW (FLURO)

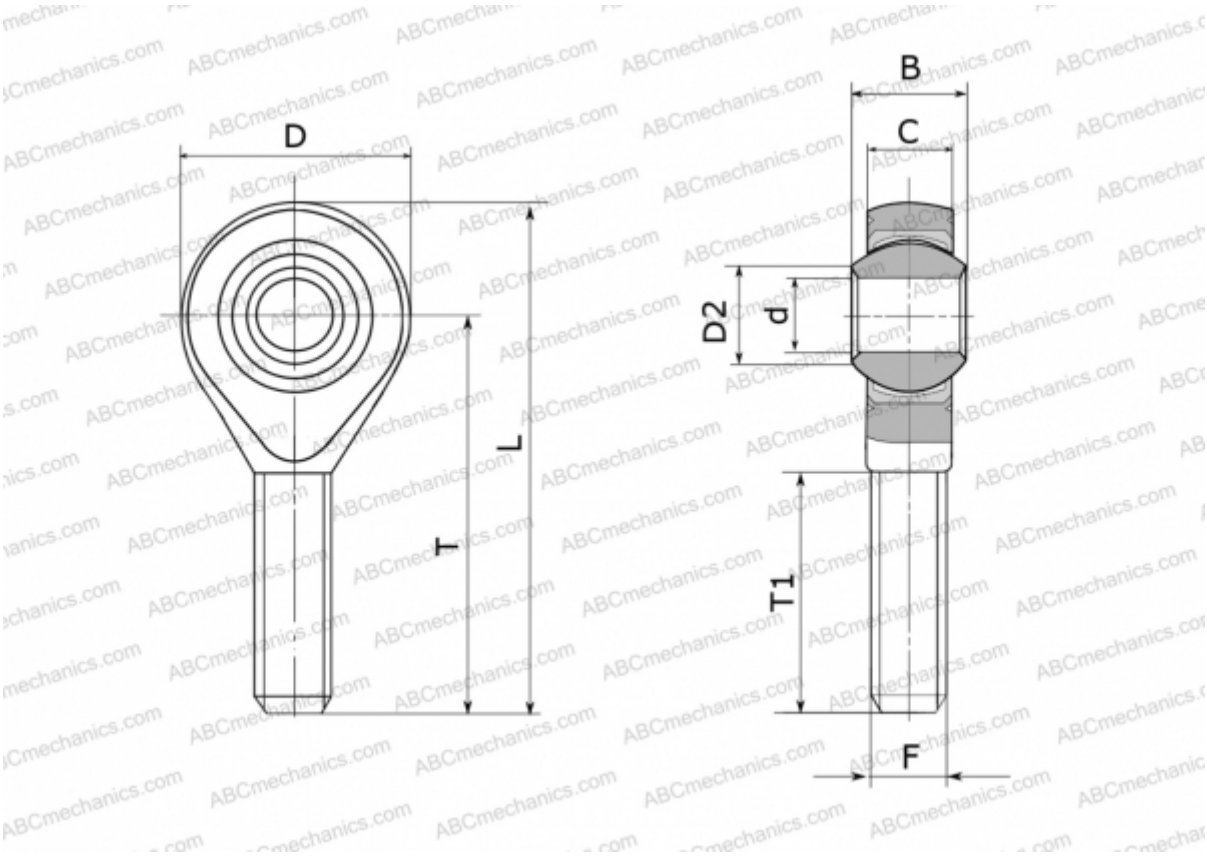

Technical specification

DIMENSIONS, MM	
d	18,000
D	46,000
D2	21,800
B	23,000
L	95,000
T	72,000
T1	44,000
C	16,500
F	M 18x1.5
WEIGHT, KG	0,267
MANUFACTURER	FLURO