GALXSW 22 FLURO

TYPE: Plain bearings, Spherical plain bearings and rod ends, Rod ends, Maintenance free, With external thread, open design, left hand thread, series GALXSW (FLURO)

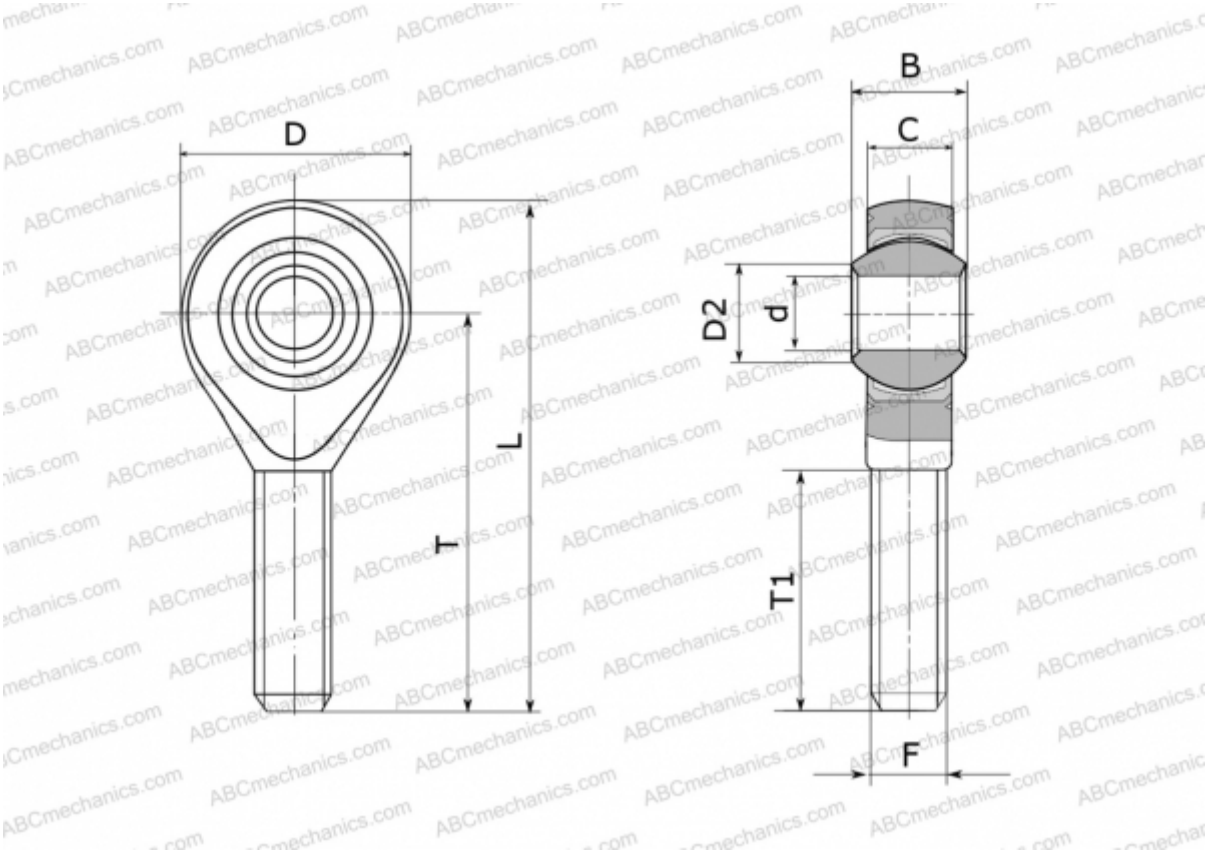

Technical specification

DIMENSIONS, MM	
d	22,000
D	54,000
D2	25,800
B	28,000
L	111,000
T	84,000
T1	51,000
C	20,000
F	M 22x1.5
WEIGHT, KG	0,443
MANUFACTURER	FLURO