GIO 10 FLURO

TYPE: Plain bearings, Spherical plain bearings and rod ends, Rod ends, Maintenance free, With internal thread, open design, right hand thread, series GIO (FLURO)

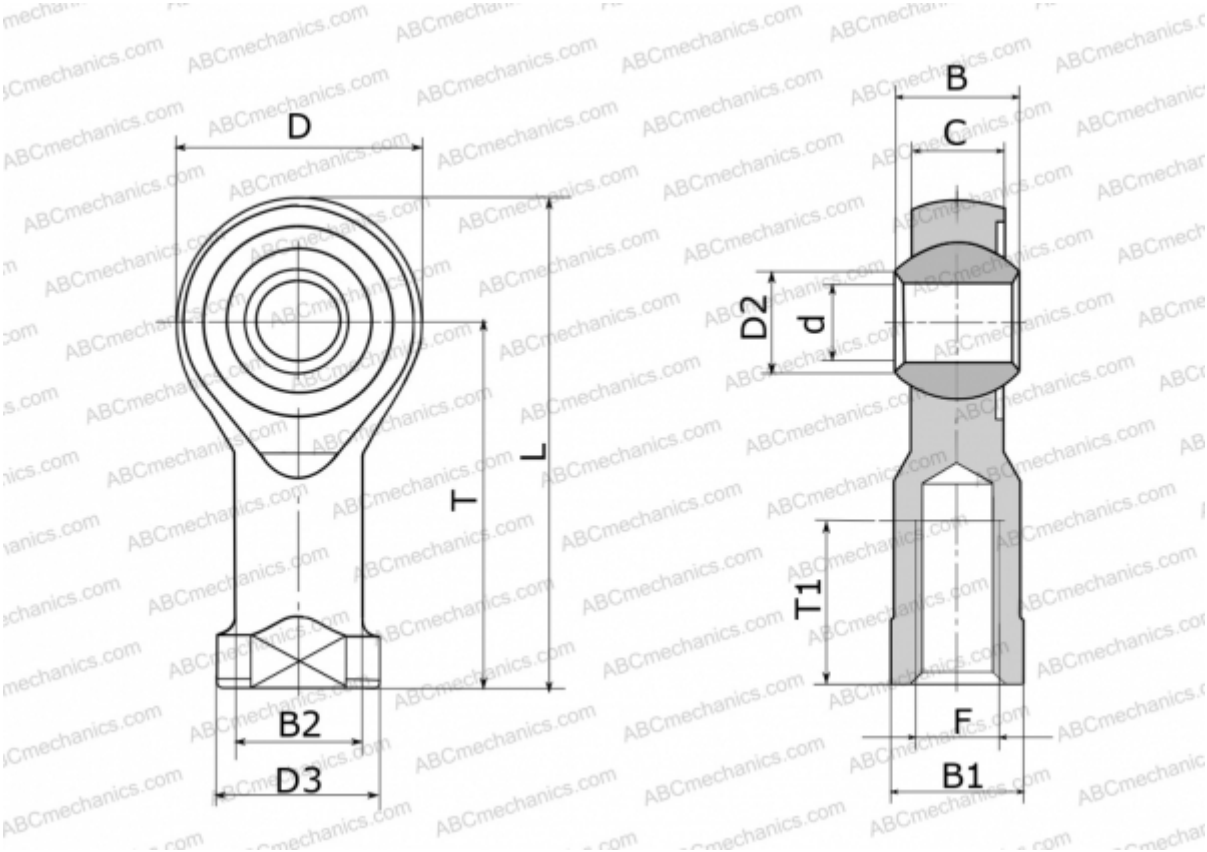

Technical specification

DIMENSIONS, MM	
d	10,000
D	28,000
D2	12,900
D3	19,000
B	14,000
B1	17,000
B2	15,000
L	57,000
T	43,000
T1	20,000
C	10,500
F	M 10
WEIGHT, KG	0,076

MANUFACTURER	FLURO