GILO 6 FLURO

TYPE: Plain bearings, Spherical plain bearings and rod ends, Rod ends, Maintenance free, With internal thread, open design, left hand thread, series GILO (FLURO)

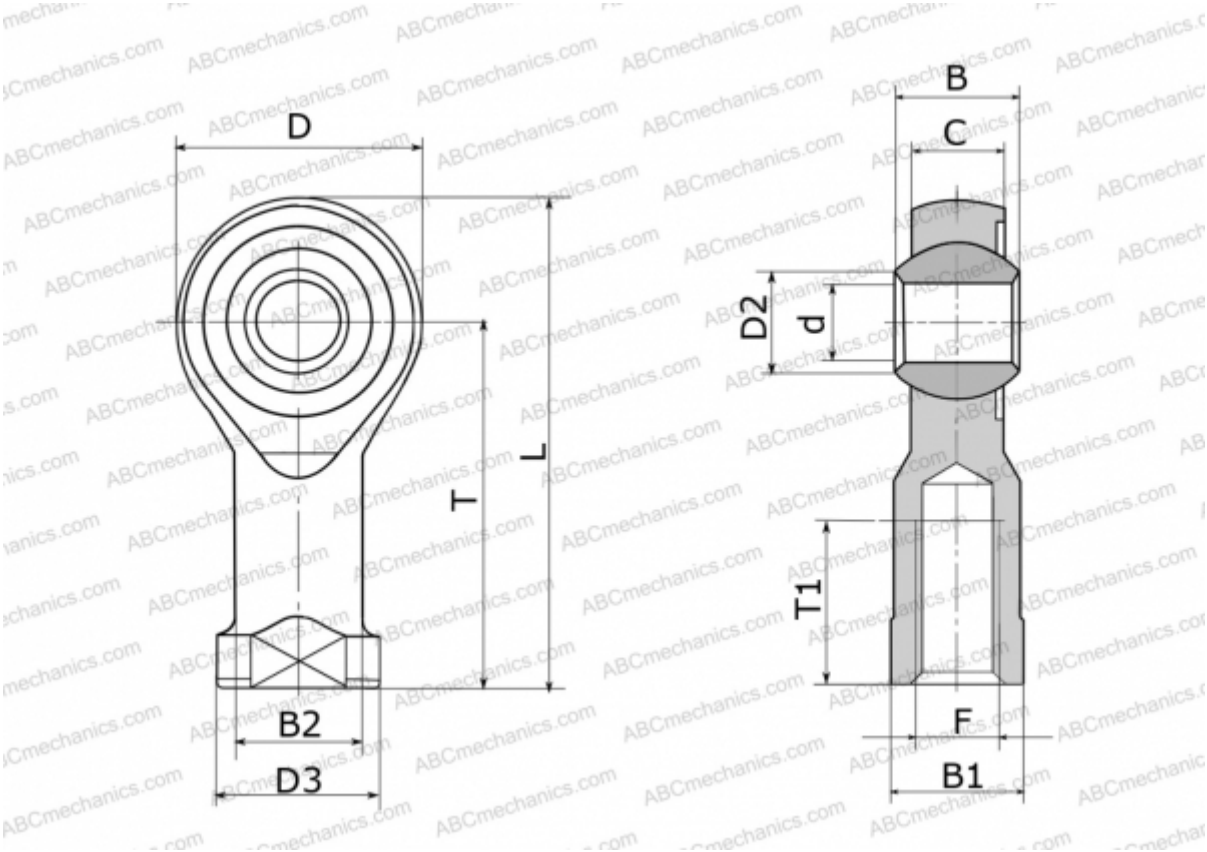

Technical specification

DIMENSIONS, MM	
d	6,000
D	20,000
D2	8,900
D3	13,000
B	9,000
B1	11,000
B2	10,000
L	40,000
T	30,000
T1	12,000
C	6,750
F	M 6
WEIGHT, KG	0,027

MANUFACTURER	FLURO