GALOW 6 FLURO

TYPE: Plain bearings, Spherical plain bearings and rod ends, Rod ends, Maintenance free, With external thread, open design, left hand thread, series GALOW (FLURO)

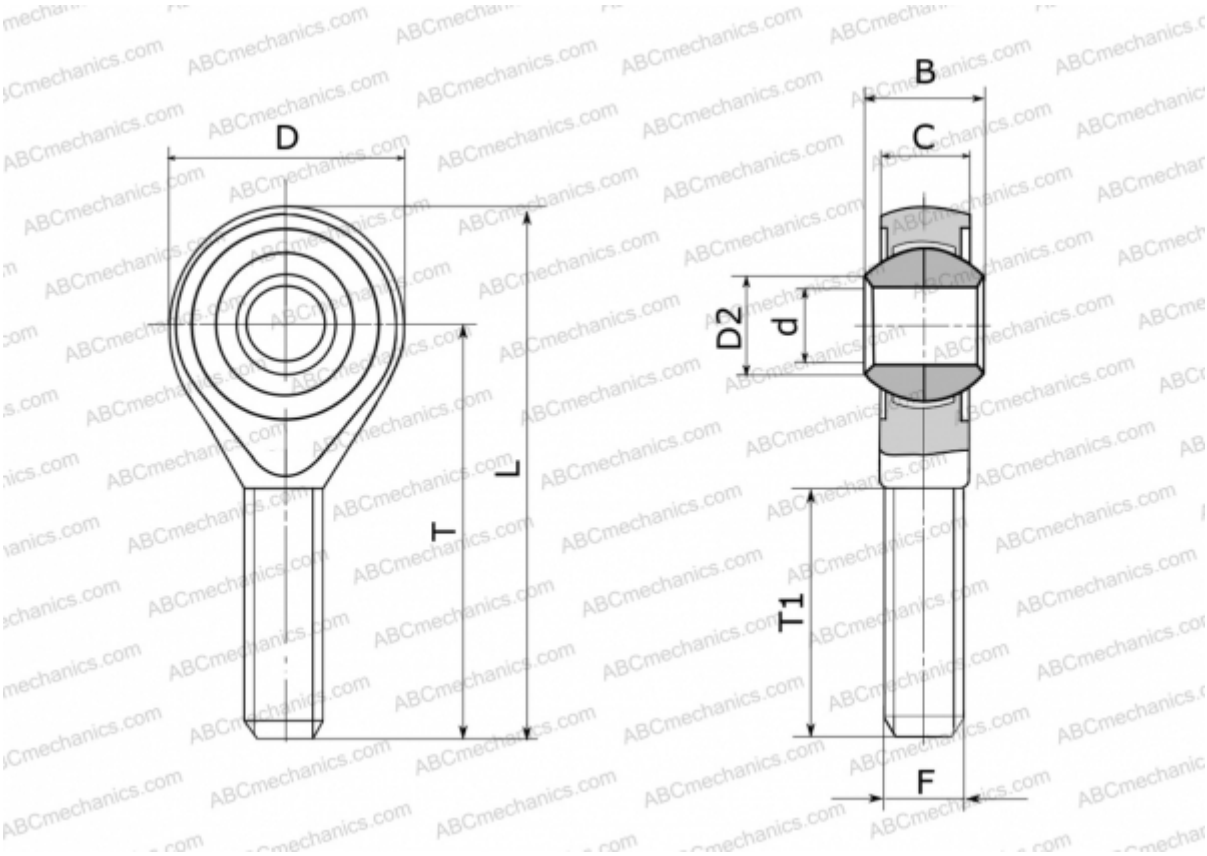

Technical specification

DIMENSIONS, MM	
d	6,000
D	20,000
D2	8,900
B	9,000
L	46,000
T	36,000
T1	21,000
C	6,750
F	M 6
WEIGHT, KG	0,020
MANUFACTURER	FLURO