G...12-BO FLURO

TYPE: Plain bearings, Spherical plain bearings and rod ends, Rod ends, Maintenance free, With threaded bolt, for use as a right angle connector, G...-BO (FLURO)

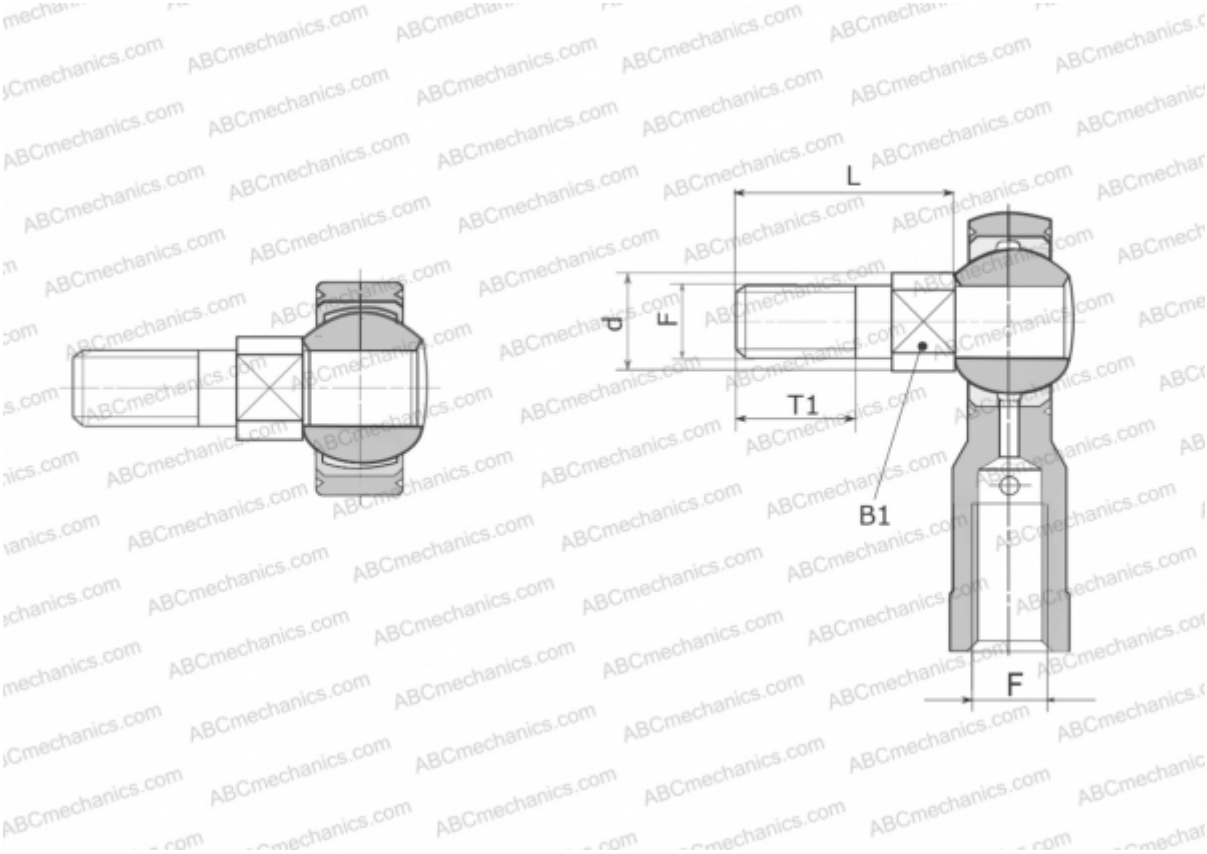

Technical specification

DIMENSIONS, MM	
d	15,000
B1	14,000
L	32,500
T1	20,000
F	M 12
WEIGHT, KG	0,040
MANUFACTURER	FLURO