GIR30-DO-2RS ELGES

TYPE: Plain bearings, Spherical plain bearings and rod ends, Rod ends, Requiring maintenance, With internal thread, with lip seals or high performance seals, right hand thread, series GIR..-DO-2RS (INA)

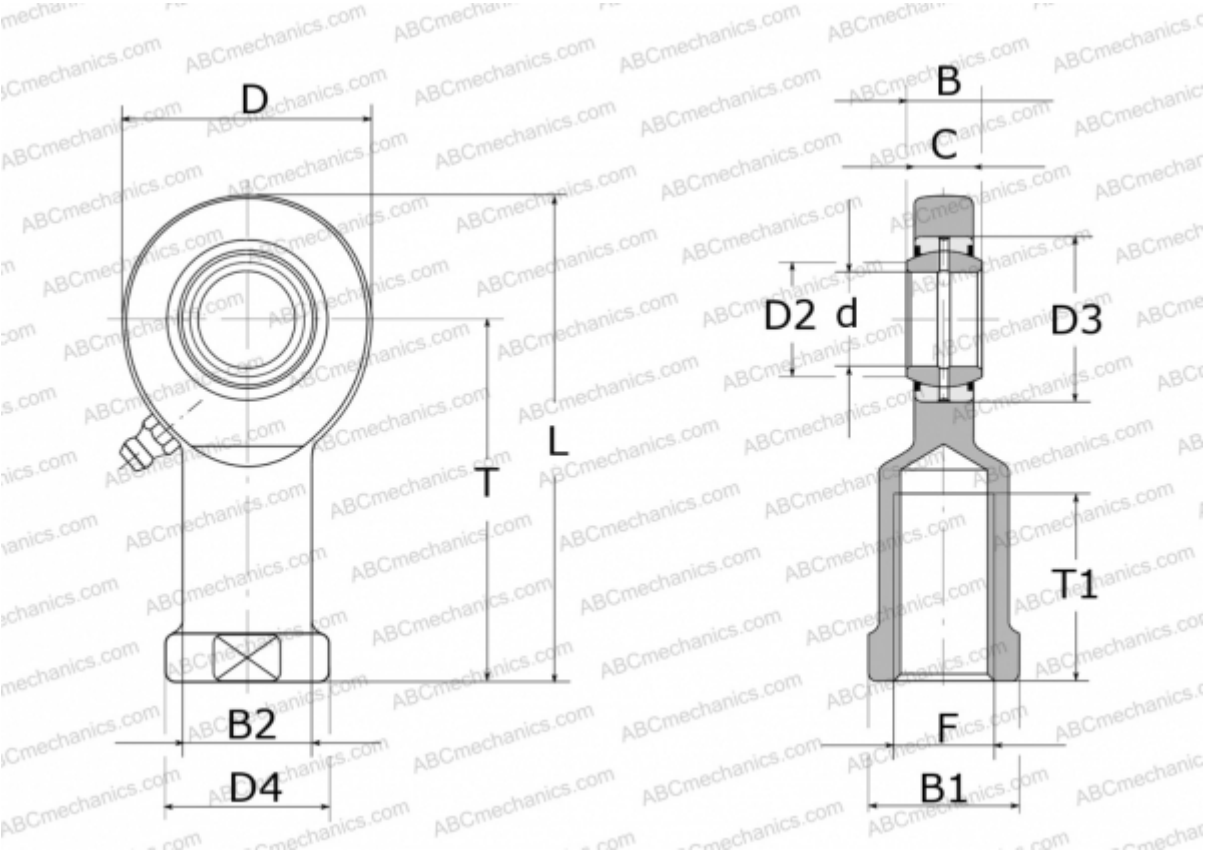

Technical specification

DIMENSIONS, MM	
d	30,000
D	73,000
D2	34,200
D3	47,000
D4	50,000
B	22,000
B1	41,000
B2	40,000
L	146,500
T	110,000
T1	56,000
C	19,000
F	M30X2
WEIGHT, KG	0,980

MANUFACTURER	ELGES