GIL 16 FLURO

TYPE: Plain bearings, Spherical plain bearings and rod ends, Rod ends, Requiring maintenance, With internal thread, open design, left hand thread, series GIL (FLURO)

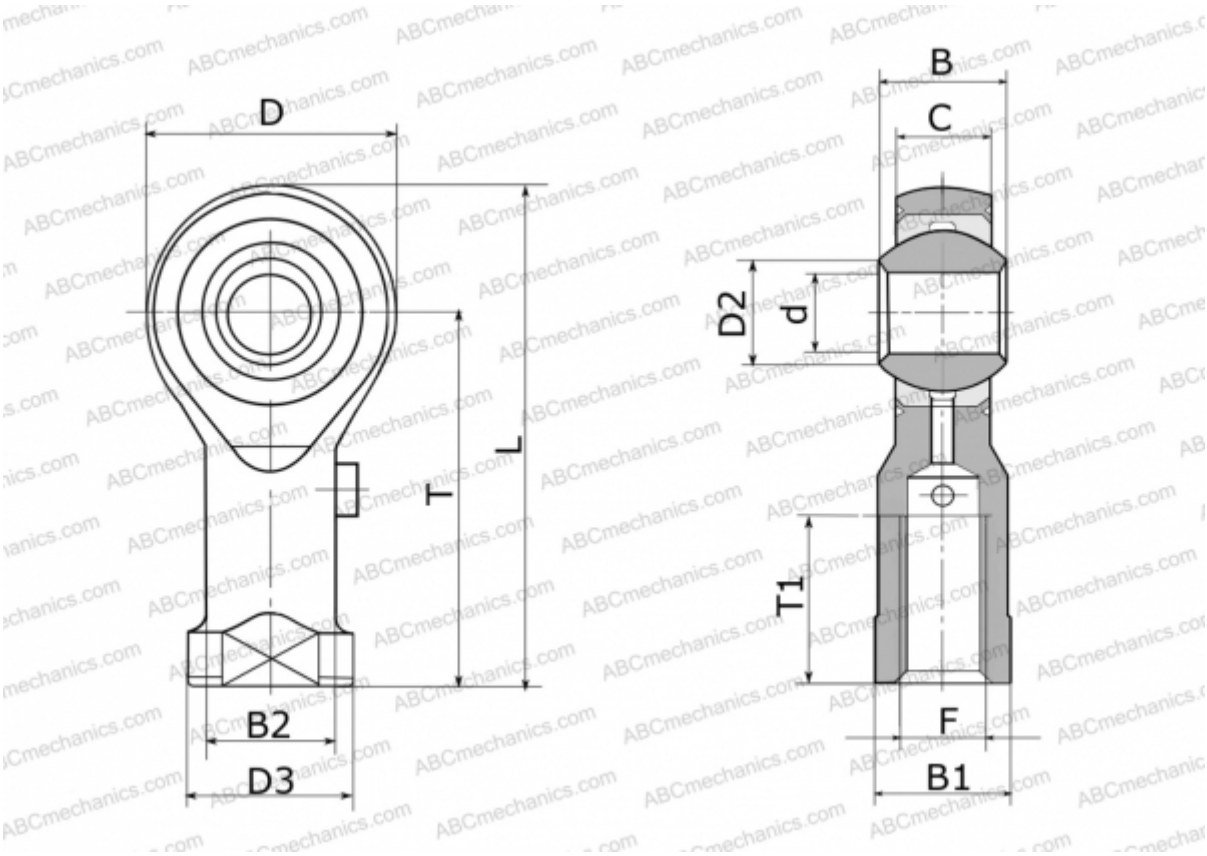

Technical specification

DIMENSIONS, MM	
d	16,000
D	42,000
D2	19,300
D3	27,000
B	21,000
B1	22,000
B2	22,000
L	85,000
T	64,000
T1	28,000
C	15,000
F	M 16
WEIGHT, KG	0,230

MANUFACTURER	FLURO