GAS 5 FLURO

TYPE: Plain bearings, Spherical plain bearings and rod ends, Rod ends, Requiring maintenance, With external thread, open design, right hand thread, series GAS (FLURO)

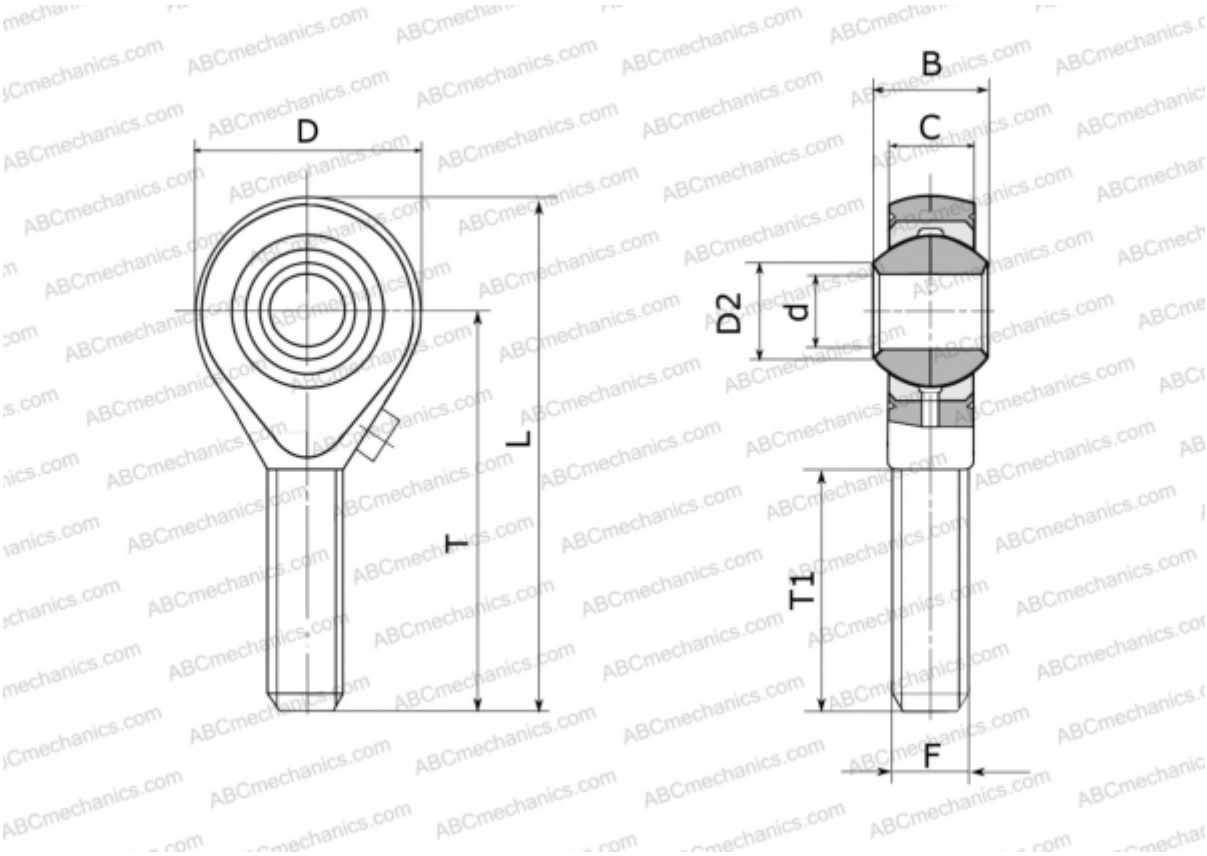

Technical specification

DIMENSIONS, MM	
d	5,000
D	18,000
D2	7,700
B	8,000
L	42,000
T	33,000
T1	19,000
C	6,000
F	M 5
WEIGHT, KG	0,013
MANUFACTURER	FLURO