# GILXS 25 FLURO

TYPE: Plain bearings, Spherical plain bearings and rod ends, Rod ends, Requiring maintenance, With internal thread, open design, left hand thread, series GILXS (FLURO)

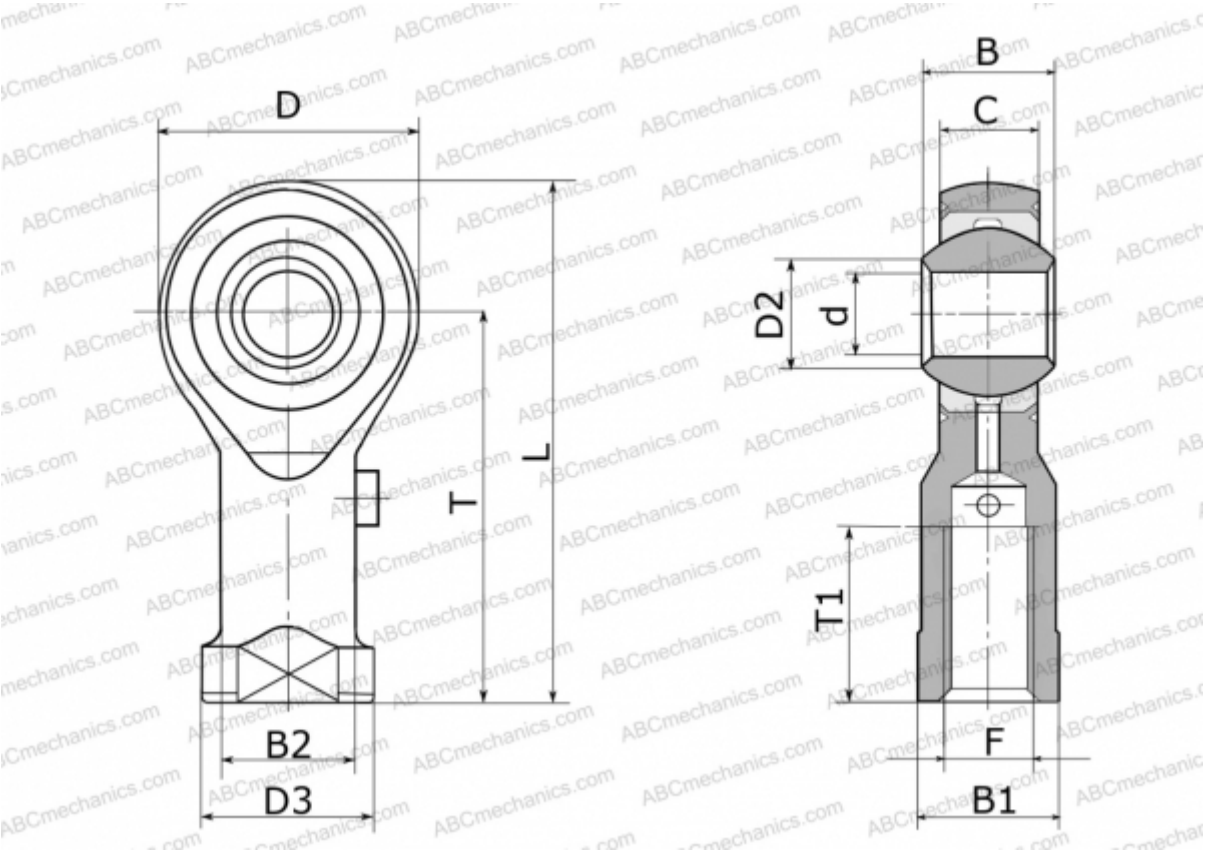


## Technical specification

| DIMENSIONS, MM | |
|---|---|
| d | 25,000 |
| D | 60,000 |
| D2 | 29,600 |
| D3 | 42,000 |
| B | 31,000 |
| B1 | 36,000 |
| B2 | 33,500 |
| L | 124,000 |
| T | 94,000 |
| T1 | 42,000 |
| C | 22,000 |
| F | M 24x2 |
| **WEIGHT, KG** | 0,750 |

| | |
|---|---|
| **MANUFACTURER** | FLURO |