GILRS 12 FLURO

TYPE: Plain bearings, Spherical plain bearings and rod ends, Rod ends, Requiring maintenance, With internal thread, open design, left hand thread, stainless steel, series GILRS (FLURO)

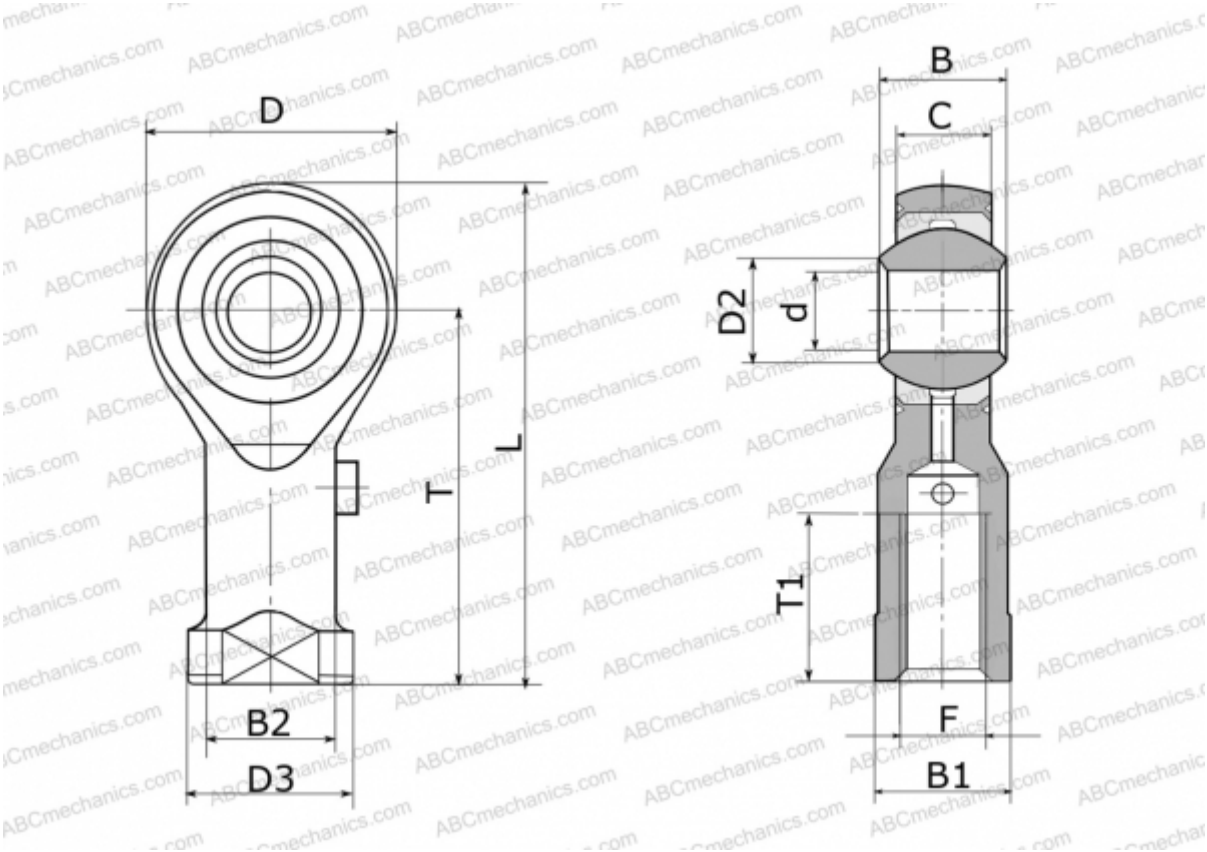

Technical specification

DIMENSIONS, MM	
d	12,000
D	32,000
D2	15,400
D3	22,000
B	16,000
B1	19,000
B2	17,500
L	66,000
T	50,000
T1	22,000
C	12,000
F	M 12

MANUFACTURER	FLURO