PBMF 101608 M1 SKF

Plain bushes

TYPE: Plain bearings, Bushings, thrust washers and strips, Bushings, Flanged, Solid bronze (SKF)

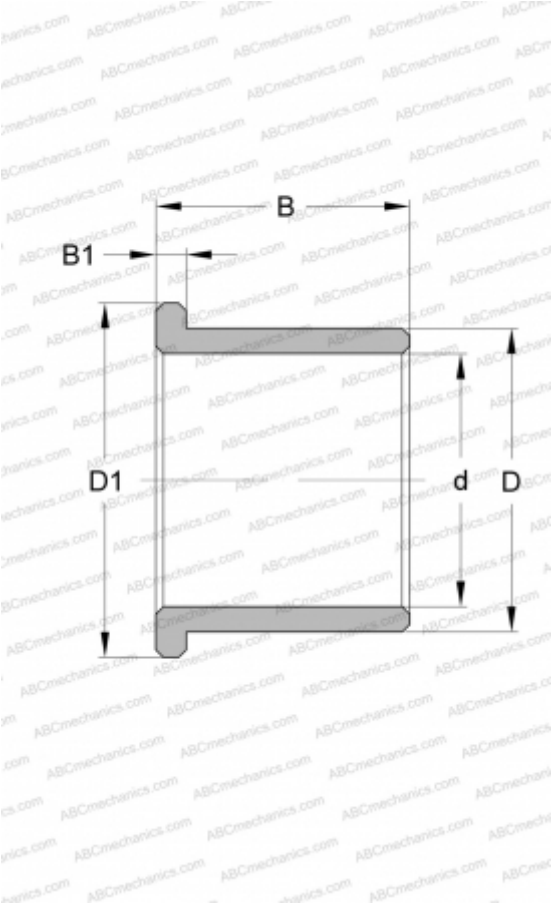

Technical specification

DIMENSIONS, MM	
d	10,000
D	16,000
D1	20,000
B	8,000
B1	3,000

MANUFACTURER	SKF