PCMW 386201.5 M SKF

Thrust washers

TYPE: Plain bearings, Bushings, thrust washers and strips, Thrust washers, Maintenance-free, POM composite (SKF)

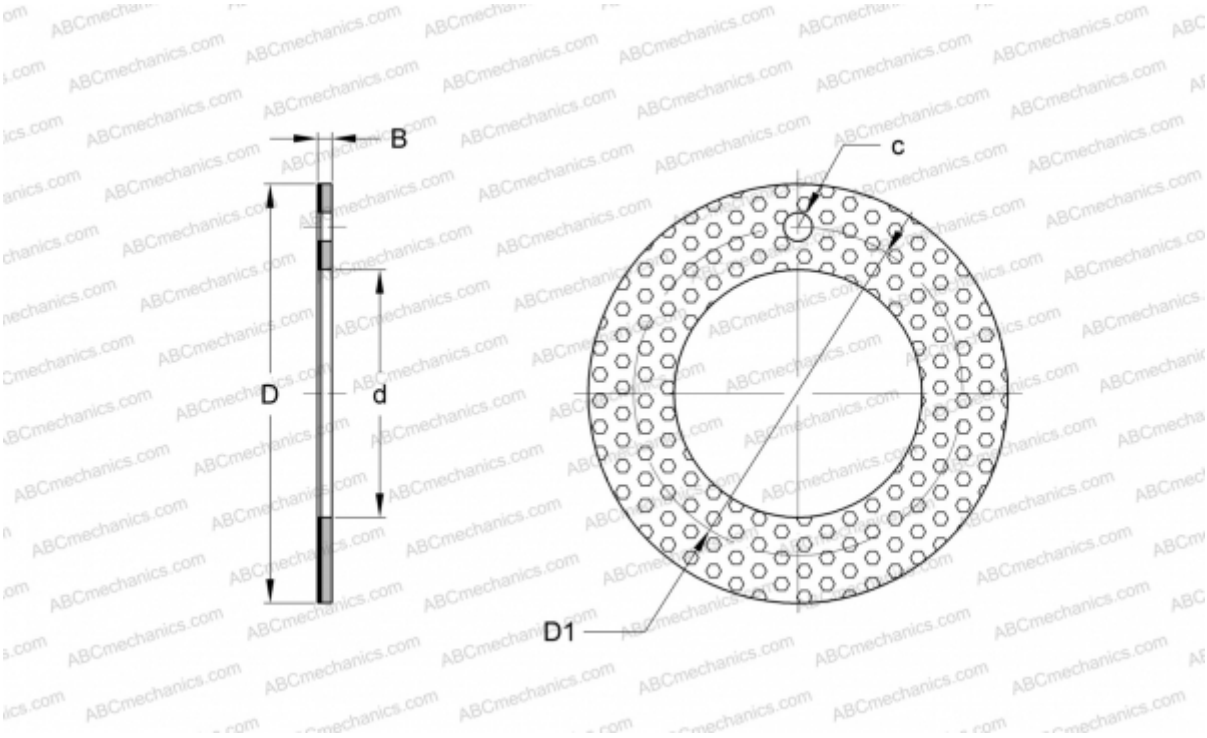

Technical specification

DIMENSIONS, MM	
d	38,000
D	62,000
D1	50,000
B	1,500
c	4,250
WEIGHT, KG	0,018
MANUFACTURER	SKF