IR-111412 NSK

Inner ring

TYPE: Rolling bearing parts and accessories, Inner ring, For solid needle roller bearings, type IR (NSK), inch size

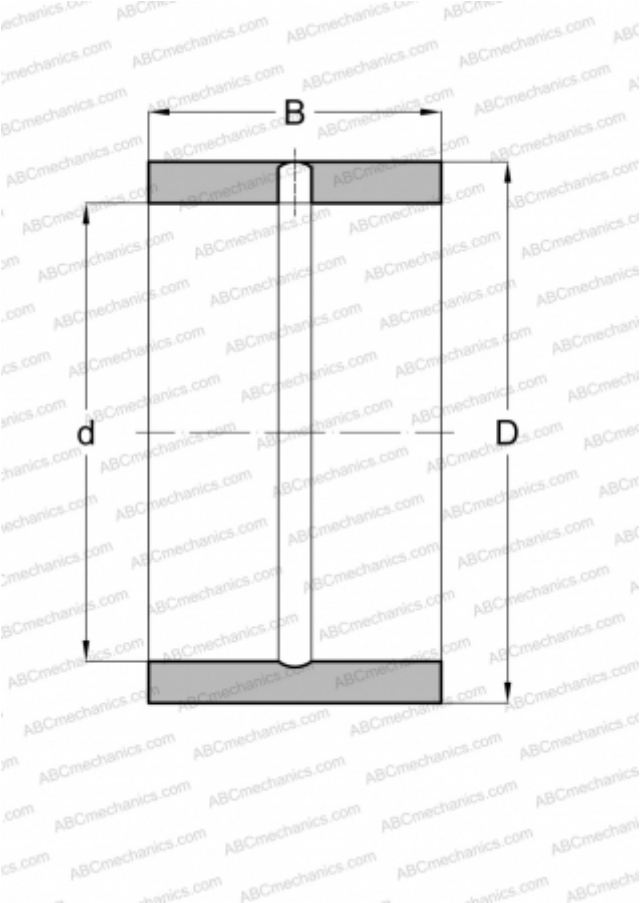

Technical specification

DIMENSIONS, MM	
d	17,462
D	22,225
B	19,050
WEIGHT, KG	0,023
MANUFACTURER	NSK

ASSOCIATED PRODUCTS

HJ-142212