PCMW 183201.5 E SKF

Thrust washers

TYPE: Plain bearings, Bushings, thrust washers and strips, Thrust washers, Maintenance-free, PTFE composite (SKF)

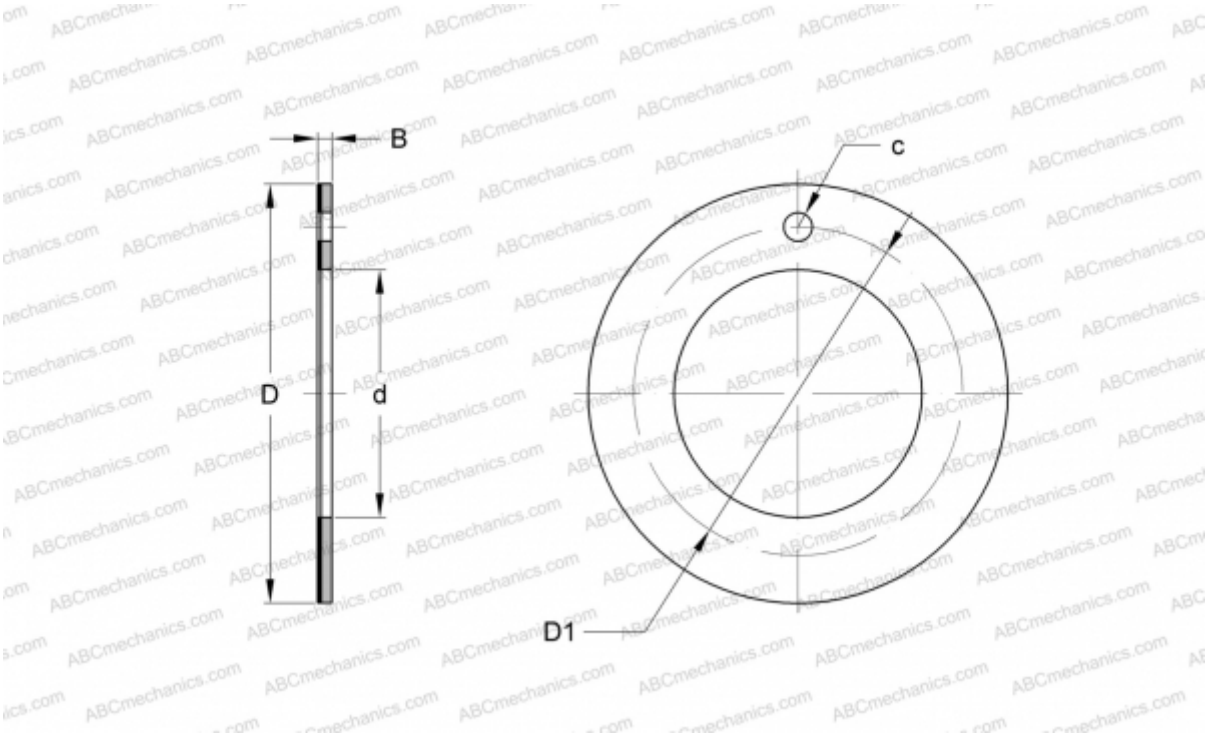

Technical specification

DIMENSIONS, MM	
d	18,000
D	32,000
D1	25,000
B	1,500
c	2,250
WEIGHT, KG	0,006
MANUFACTURER	SKF

REPLACES
PCMW183201.5B