# 6200 ZNR STEYR

Deep groove ball bearings

TYPE: Ball bearings, Radial ball bearings, Single row, With snap ring groove, Snap ring, shield Z

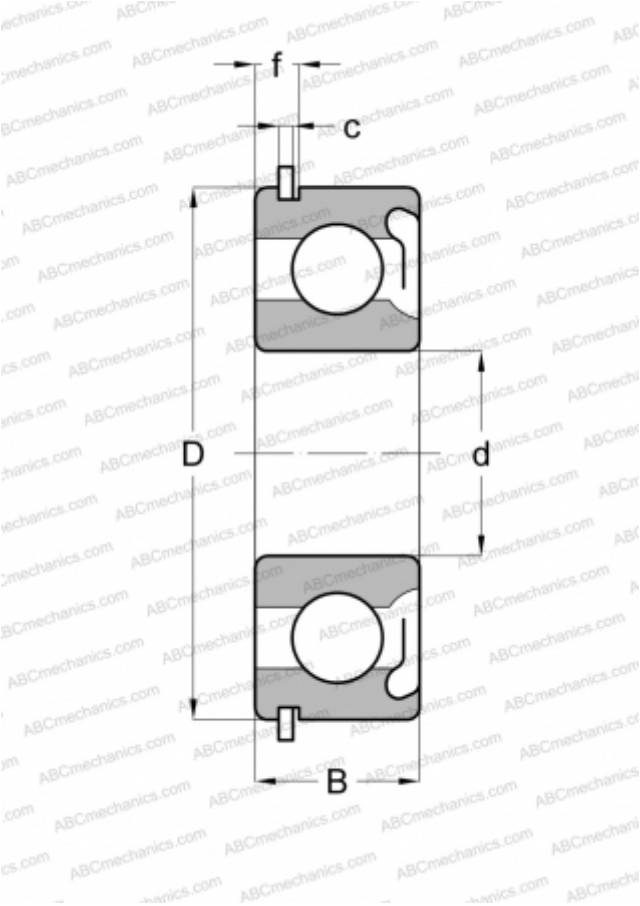


## Technical specification

| DIMENSIONS, MM | |
|---|---|
| d | 10,000 |
| D | 30,000 |
| B | 9,000 |
| f | 3,404 |
| c | 1,346 |

| | |
|---|---|
| **WEIGHT, KG** | 0,036 |
| **MANUFACTURER** | STEYR |

| INTERCHANGE | |
|---|---|
| ABC | 6200 ZNR |
| SKF | 6200-ZNR |
| MRC | 200-SFG |
| FAG | 6200 ZNR |
| NEW DEPARTURE | 47500 |